PSA 信昌電子陶瓷股份有限公司

Prosperity Dielectrics Co., Ltd.

No.566-1, Kaoshi Rd., Yangmei, Taoyuan 32668, Taiwan (R.O.C.)

Tel : 886-3-4753355 Fax : 886-3-4854959

Messrs. : 一般共用

Date : 2025/09/24

APPROVAL SHEET

Product Name : High Capacitance Multilayer Ceramic Chip Capacitors

Part No. : FS Series

Description : Size≤2225, X7R/X7S/X6S/X5R, Cap.≥1μF, U_R<1KV

PREPARED BY	APPROVED BY

信昌電子陶瓷股份有限公司

PROSPERITY DIELECTRICS CO., LTD.

桃園市楊梅區高獅路 566-1 號 http://www.pdc.com.tw

Tel : 03-4753355 ext : **Fax : 03-4854959**

Contactor : _____ **Mobile :** _____

Copyright © by Prosperity Dielectrics Co., LTD. | All rights reserved.

PSA 信昌電子陶瓷股份有限公司

Prosperity Dielectrics Co., Ltd.

No.566-1, Kaoshi Rd., Yangmei, Taoyuan 32668, Taiwan (R.O.C.)

Tel : 886-3-4753355 Fax : 886-3-4854959

SPECIFICATION

FOR

Product Name : High Capacitance Multilayer Ceramic Chip Capacitors

Part No. : FS Series

Description : Size≤2225, X7R/X7S/X6S/X5R/, Cap.≥1μF, U_R<1KV

SPEC. No. : FS-000-001-29	
DATE : 2025/09/24	

DRAWN BY	CHECEKED BY	APPROVED BY
Jane Hsiao	Yvens Chou	Hank chiang

Copyright © by Prosperity Dielectrics Co., LTD. | All rights reserved. DCM-003-8.2 Rev 2

1. INTRODUCTION

PDC FS Series green type capacitors are manufactured by using environmental friendly material without lead or cadmium. These capacitors feature series connection of multi-layer capacitor units in a MLCC to realize high voltage performance. This special design can distribute voltage gradients throughout the entire capacitor, so as to prevent short circuit failure. It is a safety design for LCD back-lighting inverter application.

2. FEATURES

a. Realize high capacitance in small sizes.
b. Capacitor with lead-free termination (pure Tin).
c. HALOGEN& RoHS compliant.
d. Surface mount suited for wave and reflow soldering.
e. High reliability and no polarity.

3. APPLICATIONS

a. Digital circuit coupling or decoupling applications.
b. For bypassing.
c. Ideal for smoothing circuits.
d. DC to DC converter.

4. HOW TO ORDER

FS	55	X	106	K	500	E	G	G
PDC Family	Size	Dielectric	Capacitance	Tolerance	Rated Voltage	Packaging	Thickness	Control Code
Table 1	Table 2	Table 3	Table 4	Table 5	Table 6	Table 7	Table 8	Table 9

Table 1 PDC Family

Code	Description
FS	High Capacitance Capacitor ≥1μF(105)

Table 2 Size

Code	Description	Code	Description	Code	Description
03	0201 (0603)	31	1206 (3216)	46	1825 (4563)
15	0402 (1005)	32	1210 (3225)	52	2211 (5728)
18	0603 (1608)	42	1808 (4520)	55	2220 (5750)
21	0805 (2012)	43	1812 (4532)	56	2225 (5763)

Table 3 Dielectric Material Characteristics

Code	Description	Code	Description
N	C0G	X	X7R
B	X5R	A	X7S
S	X6S		

Table 4 Capacitance Rule Code

Code	Description	Code	Description
R47	0.47pF	102	$102=10\times10^{2}=1000pF$
0R5	0.5pF	104	$104=10\times10^{4}=100nF$
100	$100=10\times10^{0}=10pF$	106	$106=10\times10^{6}=10\mu F$

Table 5 Tolerance

Code	Description	Code	Description	Code	Description
A	±0.05 pF	I	-10% ~ 0%	Q	±0.03 pF
B	±0.10 pF	J	±5 %	Z	-20% ~ +80%
C	±0.25 pF	K	±10 %	X	+10% ~ +20%
D	±0.50 pF	L	0% ~ +10%		
F	±1 %	M	±20 %		
G	±2 %	N	-5% ~ +10%		
H	±3 %	P	±0.02 pF		

Table 6 Rated Voltage

Code	Description	Code	Description	Code	Description
6R3	6.3Vdc	201	200Vdc	202	2000Vdc
100	10Vdc	251	250Vdc	302	3000Vdc
160	16Vdc	401	400Vdc	402	4000Vdc
250	25Vdc	501	500Vdc	502	5000Vdc
350	35Vdc	631	630Vdc	602	6000Vdc
500	50Vdc	102	1000Vdc		
101	100Vdc	152	1500Vdc		

Table 7 Packaging Type

Code	Description	Code	Description
B	Bulk	T	Tray package
E	Tape and 7" Reel, Embossed Tape	P	Tape and 7" Reel, Paper Tape
K	Tape and 10" Reel, Embossed Tape	D	Tape and 10" Reel, Paper Tape
L	Tape and 13" Reel, Embossed Tape	G	Tape and 13" Reel, Paper Tape

Table 8 Thickness Description

Code	Description	Code	Description	Code	Description
A	0.60 ± 0.10 mm	I	1.25 ± 0.20 mm	Q	0.50 +0.02/-0.05 mm
B	0.8 + 0.15/-0.10 mm	J	1.15 ± 0.15 mm	R	3.10 ± 0.30 mm
C	1.25 ± 0.10 mm	K	0.50 ± 0.20 mm	S	0.80 ± 0.07 mm
D	1.40 ± 0.15 mm	L	0.30 ± 0.03 mm	T	0.85 ± 0.10 mm
E	1.60 ± 0.20 mm	M	0.95 ± 0.10 mm	U	0.50 ± 0.10 mm
F	2.00 ± 0.20 mm	N	0.50 ± 0.05 mm	V	0.20 ± 0.02 mm
G	2.50 ± 0.30 mm	O	3.50 ± 0.20 mm	X	0.80 ± 0.10 mm
H	2.80 ± 0.30 mm	P	1.60 +0.3/-0.10 mm	Z	0.25 ± 0.03 mm

Table 9 Special Control Code

Code	Description
G	RoHS Compliant

Copyright © by Prosperity Dielectrics Co., LTD. | All rights reserved.

5. EXTERNAL DIMENSIONS

Size Inch (mm)	L (mm)	W (mm)	Code / T (mm)	M_B (mm)
0201(0603)	0.60±0.03 0.60±0.05 (Cap.≥0.68μF) 0.60±0.09 (Cap.≥1.0μF)	0.30±0.03 0.30±0.05 (Cap.≥0.68μF) 0.30±0.09 (Cap.≥1.0μF)	See No.4 Reference Table 8	0.15±0.05
0402(1005)	1.00±0.10 1.00±0.20#1	0.50±0.10 0.50±0.20#1		0.25 +0.05/-0.10
0603(1608)	1.60±0.15 1.60±0.20#2	0.80±0.15 0.80±0.20#2		0.40±0.15
0805(2012)	2.00±0.20	1.25±0.20		0.50±0.20
1206(3216)	3.20±0.20 3.20 +0.30/-0.10#3 3.30±0.30#4	1.60±0.20 1.60 +0.30/-0.10#3 1.60 +0.30/-0.10#4		0.60±0.20
1210(3225)	3.20±0.30	2.50±0.30		0.75±0.35
1812(4532)	4.50±0.40	3.20±0.30		0.75±0.35
1825(4563)	4.50±0.40	6.30±0.40		0.75±0.35
2220(5750)	5.70±0.40	5.00±0.40		0.85±0.35
2225(5763)	5.70±0.40	6.30±0.40		0.85±0.35

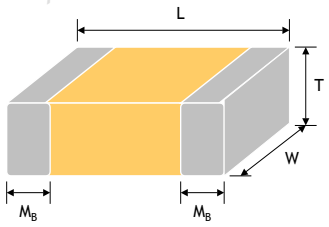

Fig. 5.1 The outline of MLCC

6. GENERAL ELECTRICAL DATA

Dielectric	X7R	X7S	X6S	X5R
Size	0402, 0603, 0805, 1206, 1210, 1812, 1825, 2220, 2225	0402, 0603, 0805, 1206, 1210	0201, 0402, 0603, 0805, 1206, 1210	0201, 0402, 0603, 0805, 1206, 1210
Rated voltage (WVDC)	6.3V, 10V, 16V, 25V, 50V, 100V, 250V, 500V, 630V	6.3V, 10V, 16V, 25V, 50V, 100V	6.3V, 10V, 16V, 25V, 35V, 50V	4V, 6.3V, 10V, 16V, 25V, 35V, 50V
Capacitance range*	1μF to 47μF	1μF to 100μF	1μF to 100μF	1μF to 220μF
Capacitance tolerance**	J(±5%)K(±10%), M(±20%)	K(±10%), M(±20%)	K(±10%), M(±20%)	K(±10%), M(±20%)
Tan δ*	Note 1			
Operating temperature	-55 to +125°C	-55 to +125°C	-55 to +105°C	-55 to +85°C
Capacitance characteristic	±15%	±22%	±22%	±15%
Termination	Cu/Ni/Sn (lead-free termination)			

* Measured at the condition of 30~70% related humidity.
X7R/X7S/X6S/X5R : Apply 1.0±0.2Vrms, 1.0KHz±10% for Cap.≤10μF; 0.5±0.2Vrms, 120Hz±20% for Cap.>10μF, at 25°C ambient temperature.
** Preconditioning for Class II MLCC : Perform a heat treatment at 150±10°C for 1 hour, then leave in ambient condition for 24±2 hours before measurement.

X5R

Rated vol.	D.F.≦	Exception of D.F. ≦	
≧100V	≦2.5%	≦3%	1206≧0.47μF
		≦5%	0603≧0.068μF; 0805>0.1μF; 1206≧1μF; 1210≧2.2μF
		≦10%	0805>0.22μF; 1210≧3.3μF
50V	≦2.5%	≦3%	0201(50V); 0603≧0.047μF; 0805≧0.18μF; 1206≧0.47μF
		≦5%	0201≧0.01uF; 1210≧3.3μF
		≦10%	0402≧0.012μF; 0603>0.1μF; 0805≧1μF;1206≧2.2μF; 1210≧10μF
		≦12.5%	1206=10μF
35V	≦3.5%	≦10%	0603≧1μF; 0805≥2.2μF; 1206≧2.2μF; 1210≧10μF
25V	≦3.5%	≦5%	0201=0.01μF; 0805≧1μF
		≦7%	0603≧0.33μF
		≦10%	0201>0.01μF; 0402≧0.10μF; 0603≧0.47μF; 0805≧2.2μF; 1206≧4.7μF; 1210≧10μF
		≦12.5%	0402≧0.47μF;0805=10μF
16V	≦3.5%	≦5%	0201=0.01μF; 0402≧0.033μF; 0603≧0.15μF; 0805≧0.68μF; 1206≧2.2μF; 1210≧4.7μF
		≦10%	0201>0.01uF; 0402≧ 0.22uF; 0603>0.47μF; 0805≧2.2μF; 1206≧4.7μF; 1210≧22μF
		≦12.5%	0402≧1μF;0805=10μF
10V	≦5%	≦10%	0201≧0.012μF; 0402≧0.22μF; 0603≧0.33μF; 0805≧2.2μF; 1206≧2.2μF; 1210≧22μF; 01R5/X5R
		≦12.5%	0805=10μF
		≦15%	0201>0.1μF; 0402≧1μF; 0603≧10μF
6.3V	≦10%	≦15%	0201>0.1μF; 0402≧1μF; 0603≧10μF; 0805≧4.7μF; 1206≧47μF; 1210≧100μF
		≦20%	0402≧2.2μF
4V	≦15%	---	---

X7R

Rated vol.	D.F.≦	Exception of D.F. ≦	
≧100V	≦2.5%	≦3.5%	1206≥0.47μF, 1812≥4.7μF, 1825≥4.7μF, 2220≥4.7μF, 2225≥4.7μF
		≦5%	0603≧0.068μF; 0805>0.1μF; 1206≧1μF; 1210≧2.2μF;
		≦10%	0805>0.22μF; 1210≧3.3μF
50V	≦2.5%	≦3.5%	0201(50V); 0603≧0.047μF; 0805≧0.18μF; 1206≧0.47μF 1210≥2.2μF, 1812≥4.7μF, 1825≥4.7μF, 2220≥4.7μF, 2225≥4.7μF
		≦5%	0201≧0.01uF; 1210≧3.3μF
		≦10%	0402≧0.012μF; 0603>0.1μF; 0805/X7R>0.47μF; 1206≧2.2μF; 1210≧10μF
35V	≦3.5%	≦10%	0603≧1μF; 0805≥2.2μF; 1206≧2.2μF; 1210≧10μF
25V	≦3.5%	≦5%	0201≧0.01μF; 0805≧1μF; 1210≧10μF
		≦7%	0603≧0.33μF
		≦10%	0201≧0.1μF; 0402≧0.056μF; 0603≧0.47μF; 0805≧2.2μF; 1206≧4.7μF; 1210≧22μF
		≦12.5%	0402≧0.47μF
16V	≦3.5%	≦5%	0201≧0.01μF; 0402≧0.033μF; 0603≧0.15μF; 0805≧0.68μF; 1206≧2.2μF; 1210≧4.7μF
		≦10%	0201/X7R≧0.022μF; 0402≧0.22uF; 0603>0.47μF; 0805≧2.2μF; 1206≧4.7μF; 1210≧22μF
10V	≦5%	≦10%	0201≧0.012μF; 0402≧0.22μF; 0603≧0.33μF; 0805≧2.2μF; 1206≧2.2μF; 1210≧22μF
		≦15%	0201≧0.1μF; 0402≧1μF
6.3V	≦10%	≦15%	0201≧0.1μF; 0402≧1μF; 0603≧10μF; 0805≧4.7μF; 1206≧47μF; 1210≧100μF
		≦20%	0402≧2.2μF
4V	≦15%	---	---

Copyright © by Prosperity Dielectrics Co., LTD. | All rights reserved.

X7S

Rated vol.	D.F.≦	Exception of D.F. ≦	
≧100V	≦2.5%	≦3.5%	1206≧0.47μF
		≦5%	0603≧0.068μF;0805＞0.1μF;1206≧1μF;1210≧2.2μF
		≦10%	0805＞0.22μF;1210≧3.3μF
50V	≦2.5%	≦3.5%	0201(50V); 0603≧0.047μF; 0805≧0.18μF;1206≧0.47μF
		≦5%	0201≧0.01uF; 1210≧3.3μF
		≦10%	0402≧0.012μF;0603>0.1μF; 0805≧1μF; 1206≧2.2μF;1210≧10μF
35V	≦3.5%	≦10%	0603≧1μF;0805≥2.2μF;1206≧2.2μF;1210≧10μF
25V	≦3.5%	≦5%	0201≧0.01μF;0805≧1μF;1210≧10μF
		≦7%	0603≧0.33μF
		≦10%	0201≧0.1μF;0402≧0.10μF;0603≧0.47μF; 0805≧2.2μF; 1206≧4.7μF;1210≧22μF
		≦12.5%	0402≧0.47μF
16V	≦3.5%	≦5%	0201≧0.01μF;0402≧0.033μF;0603≧0.15μF; 0805≧0.68μF;1206≧2.2μF;1210≧4.7μF
		≦10%	0201≧0.1uF; 0402≧ 0.22uF; 0603>0.47μF;0805≧2.2μF;1206≧4.7μF; 1210≧22μF
10V	≦5%	≦10%	0201≧0.012μF;0402≧0.22μF; 0603≧0.33μF; 0805≧2.2μF;1206≧2.2μF;1210≧22μF
		≦15%	0201≧0.1μF; 0402≧1μF
6.3V	≦10%	≦15%	0201≧0.1μF;0402≧1μF;0603≧10μF; 0805≧4.7μF; 1206≧47μF; 1210≧100μF
		≦20%	0402≧2.2μF
4V	≦15%	---	---

X6S

Rated vol.	D.F.≦	Exception of D.F. ≦	
≧100V	≦2.5%	≦3.5%	1206≧0.47μF
		≦5%	0603≧0.068μF;0805＞0.1μF;1206≧1μF;1210≧2.2μF
		≦10%	0805＞0.22μF;1210≧3.3μF
50V	≦2.5%	≦3.5%	0201(50V); 0603≧0.047μF; 0805≧0.18μF;1206≧0.47μF
		≦5%	0201≧0.01uF;1210≧3.3μF
		≦10%	0402≧0.012μF;0603>0.1μF; 0805≧1μF; 1206≧2.2μF;1210≧10μF
35V	≦3.5%	≦10%	0603≧1μF;0805≥2.2μF;1206≧2.2μF;1210≧10μF
25V	≦3.5%	≦5%	0201≧0.01μF;0805≧1μF;1210≧10μF
		≦7%	0603≧0.33μF
		≦10%	0201≧0.1μF; 0402≧0.10μF;0603≧0.47μF; 0805≧2.2μF; 1206≧4.7μF;1210≧22μF
		≦12.5%	0402≧0.47μF;0805=10μF
16V	≦3.5%	≦5%	0201≧0.01μF;0402≧0.033μF;0603≧0.15μF; 0805≧0.68μF;1206≧2.2μF;1210≧4.7μF
		≦10%	0201≧0.1uF; 0402≧0.22uF; 0603>0.47μF; 0805≧2.2μF;1206≧4.7μF;1210≧22μF
		≦12.5%	0402=1μF;0805=10μF
10V	≦5%	≦10%	0201≧0.012μF;0402≧0.22μF; 0603≧0.33μF; 0805≧2.2μF;1206≧2.2μF;1210≧22μF
		≦12.5%	0805=10μF
		≦15%	0201≧0.1μF; 0402≧1μF
6.3V	≦10%	≦15%	0201≧0.1μF;0402≧0.47μF; 0603≧10μF; 0805≧4.7μF;1206≧47μF; 1210≧100μF
		≦20%	0402≧2.2μF
4V	≦15%	---	---

著作權所有 信昌電子陶瓷股份有限公司
PSA PASSIVE SYSTEM ALLIANCE
Prosperity Dielectrics Co., Ltd.
COPYRIGHT © PROSPERITY DIELECTRICS CO., LTD. ALL RIGHTS RESERVED.
Xin Yong Li

Copyright © by Prosperity Dielectrics Co., LTD. | All rights reserved.

7. CAPACITANCE RANGE

7-1. X7R

Dimension		0402	0603					0805					1206						
Cap(pF)	code	6.3V	6.3V	10V	16V	25V	50V	6.3V	10V	16V	25V	50V	6.3V	10V	16V	25V	35V	50V	100V
1000000	105	N	B	B	B	B	B		C	C	C	I		J/P	J/P	J/P		P	P
1200000	125													P	P	P		P	E/P
1500000	155								I	I	I		J	J/P	J/P	P		P	E/P
1800000	185													P	P	P		P	P
2200000	225		B	B	B			I	I	I	I	I	J	J/P	J/P	P		P	P
2700000	275													P	P	P		P	
3300000	335													P	P	P		P	
3900000	395													P	P	P		P	
4700000	475		B	B				I	I	I	I		P	P	P	P		P	
5600000	565													P	P	P			
6800000	685													P	P	P			
8200000	825													P	P	P			
10000000	106							I	I	I*			P	P	P	P	P		
12000000	126																		
15000000	156																		
18000000	186																		
22000000	226												P	P	P*				
47000000	476																		

Dimension		1210						1812								1825				
Cap(pF)	code	6.3V	10V	16V	25V	50V	100V	10V	16V	25V	50V	100V	200V	250V	450	25V	50V	100V	200V	250V
1000000	105		C	C	C	C	P	C	C	C	F	F	G/W	G/W	H	F	F	F	F	F
1200000	125		P	P	P	P	F	C	C	C	C	C				F	F	F	G	
1500000	155		F	F	F	C/E/F	F	C	C	C	C	C				F	F	F	G	
1800000	185		G	G	G	G	G	E	E	E	E	E				F	F	F	G	
2200000	225		E/G	E/G	E/G	G	F/G	E	E	E	E	E				F	F	F	G	
2700000	275		G	G	G	G	G	F	F	F	F	F				F	F	F		
3300000	335		G	G	G	G	G	F	F	F	F	F				F	F	F		
3900000	395		G	G	G	G	G	F	F	F	F	F				F	F	F		
4700000	475		F/G	F/G	F/G	F/G	G/W	G	G	G	G	G				F	F	F		
5600000	565		G	G	G	G	G	G	G	G	G					F	F	F		
6800000	685		G	G	G	G	G	G	G	G	G					F	F	F		
8200000	825		G	G	G	G	G	G	G	G	G					G	G	G		
10000000	106	F	G	G	G	G	G	G	G	G	F/G					G	G	F/G		
12000000	126		G	G	G			G	G	G										
15000000	156		G	G	G			G	G	G										
18000000	186		G	G	G			G	G	G										
22000000	226		G	G	G			G	G	G										
47000000	476	G	G																	

Xin Yong Li
Xin Yong Li

Copyright © by Prosperity Dielectrics Co., LTD. | All rights reserved.

7. CAPACITANCE RANGE(Con.)

7-1. X7R

Dimension		2220							2225						
Cap(pF)	code	25V	50V	100V	200V	250V	500V	630V	25V	50V	100V	200V	250V	500V	630V
1000000	105	F	E/F	E/F	F	F	H	H	F	F	F	F	F	G	G
1200000	125	F	F	F	G	G			F	F	F	G	G		
1500000	155	F	E/F	E/F	G	G			F	F	F	G	G		
1800000	185	F	F	F	G	G			F	F	F	G	G		
2200000	225	F	F	F	G	G			F	F	F	G	G		
2700000	275	F	F	F					F	F	F	G	G		
3300000	335	F	F	F					F	F	F				
3900000	395	F	F	F					F	F	F				
4700000	475	F	F	F					F	F	F				
5600000	565	F	F	F					F	F	F				
6800000	685	F	F	F					F	F	F				
8200000	825	G	G	G					G	G	G				
10000000	106	G	G	G					G	G	G				
12000000	126	H	H	F/G					F/G						
15000000	156	H	H	G					F/G						
18000000	186	H	H	H											
22000000	226	H	H	R											
27000000	276	H													
33000000	336	H													
39000000	396	H													
47000000	476	R													

7-2. X7S

Dimension		0402				0603					0805						
Cap(pF)	code	6.3V	10V	16V	25V	4V	6.3V	10V	16V	25V	4V	6.3V	10V	16V	25V	50V	100V
1000000	105								B								
1500000	155																
2200000	225	K															
3300000	335																
4700000	475							B	B								
6800000	685																
10000000	106													I	I		
22000000	226																
47000000	476																
100000000	107																
220000000	227																

Dimension		1206			
Cap(pF)	code	6.3V	10V	16V	25V
1000000	105				
1500000	155				
2200000	225				
3300000	335				
4700000	475				
6800000	685				
10000000	106				
22000000	226			P*	
47000000	476	P*			
100000000	107				
220000000	227				

"*" Means M tolerance only.

Xin Yong Li

Copyright © by Prosperity Dielectrics Co., LTD. | All rights reserved.

7. CAPACITANCE RANGE(Con.)

7-3. X6S

Dimension		0201		0402				0603					0805					
Cap(pF)	code	4V	6.3V	6.3V	10V	16V	25V	4V	6.3V	10V	16V	25V	4V	6.3V	10V	16V	25V	50V
1000000	105	L	L	N	N	N	K											
1500000	155																	
2200000	225			K	K				B	B	B					I		
3300000	335																	
4700000	475			K*	K*			B	B	B	B	B					I	
6800000	685																	
10000000	106			K*				B*	B*	B*	B*		I	I	I	I	I	
22000000	226							B*	B*				I	I*	I*	I		
47000000	476												I*	I*				
100000000	107																	
220000000	227																	

Dimension		1206				1210				
Cap(pF)	code	6.3V	10V	16V	25V	6.3V	10V	16V	25V	100V
1000000	105									
1500000	155									
2200000	225									
3300000	335									
4700000	475									
6800000	685									
10000000	106				P					
22000000	226		P	P*	P				G	
47000000	476	P				G	G	G		
100000000	107					G*	G*			
220000000	227									

"*" Means M tolerance only.

7-4. X5R

Dimension		0201			0402						0603					
Cap(pF)	code	6.3V	10V	16V	4V	6.3V	10V	16V	25V	50	4V	6.3V	10V	16V	25V	50V
1000000	105	L	L	L*		N	N	N	N			B	B	B	B	B
1500000	155											B	B			
2200000	225	L*	L*			N	N	K	K			B	B	B	B	B
3300000	335											B	B			
4700000	475					K*	K*					B	B	B	B	
6800000	685															
10000000	106				K*	K*	K*				B	B	B*	B	B*	
22000000	226				K*	K*					B*	B*	B*			
47000000	476										B*	B*				
100000000	107															
220000000	227															

Dimension		0805						1206					
Cap(pF)	code	4V	6.3V	10V	16V	25V	50V	4V	6.3V	10V	16V	25V	50V
1000000	105			C	C	C	I						P/M
1500000	155		I	I	I	I				J	J	P	P
2200000	225		I	I	I	I	I			J	J	P	P
3300000	335		I	I	I	I				P	P	P	P
4700000	475		I	I	I	I	I		P	P	P	P	P
6800000	685								P	P			
10000000	106		I	I	I	I	I		P	P	P	P	P
22000000	226		I	I*	I*	I*			P	P	P	P	
47000000	476	I*	I*	I*					P*	P*	P*		
100000000	107	I*	I*						P				
220000000	227							P*	P*				

Copyright © by Prosperity Dielectrics Co., LTD. | All rights reserved. DCM-003-8.3 Rev 2

7. CAPACITANCE RANGE(Con.)

7-4. X5R

Dimension		1210						
Cap(pF)	code	4V	6.3V	10V	16V	25V	35V	50V
1000000	105							
1500000	155			F	F			
2200000	225			F	F			
3300000	335							
4700000	475			F	F	F		
6800000	685							
10000000	106		F	F	F	F	G	G
22000000	226		G	G	G	G	G	
47000000	476		G	G	G	G*		
100000000	107		G*	G*	G*			
220000000	227	G*	G*					

"*" Means M tolerance only.

著作權所有 侵害必究
信昌電子陶瓷股份有限公司
PSA PASSIVE SYSTEM ALLIANCE
Prosperity Dielectrics Co., Ltd.
COPYRIGHT © PROSPERITY DIELECTRICS CO., LTD. ALL RIGHTS RESERVED.
Xin Yong Li

Copyright © by Prosperity Dielectrics Co., LTD. | All rights reserved.

8. RELIABILITY TEST CONDITIONS AND REQUIREMENTS

No.	Item	Test Condition	Requirements
1.	Visual and Dimensions	---	* No remarkable defect. * Dimensions to confirm to individual specification sheet.
2.	Capacitance		* Shall not exceed the limits given in the detailed spec.
3.	Q/D.F. (Tangent Of loss angle)	* Class II : (X7R, X7S, X6S, X5R) Cap.≤10μF, 1.0±0.2Vrms, 1KHz±10%**. Cap.>10μF, 0.5±0.2Vrms, 120Hz±20%. ** Test condition : 0.5±0.2Vrms, 1KHz±10%. X7R: 0805=106(6.3V), 0603/475(6.3V) X5R: 0201≧224 (6.3V,10V,16V)#1, 0402≧475 (6.3V,16V), 0402≧225(10V), 0603=106 (6.3V) TT18X≧475(10V) , TT15X series X6S: 0201/474(4V),0201≧104 (6.3V,10V#1), 0402≧225 (6.3V), 0402/475 (10V), 0603/106 (6.3V), X7S: 0402/225(6.3V) #1 Excluding X5R/0201/105(6.3V);225(10V), X6S/0201/104(10V) (1.0±0.2Vrms，1KHz±10%) *Before initial measurement (Class II only) : To apply de-aging at 150°C for 1hr then set for 24±2 hrs at room temp.	* X7R:

Rated	D.F.≤	Exception of D.F.≤	
≥100V	≤2.5%	≤3.5%	1206≥0.47μF, 1812≥4.7μF, 1825≥4.7μF, 2220≥4.7μF, 2225≥4.7μF
		≤5%	0603≥0.068μF, 0805>0.1μF, 1206>1μF, 1210≥2.2μF
		≤10%	0805>0.22μF, 1210≥3.3μF
50V	≤2.5%	≤3.5%	0201(50V), 0603≥0.047μF, 0805≥0.18μF, 1206≥0.47μF, 1210≥2.2μF, 1812≥4.7μF, 1825≥4.7μF, 2220≥4.7μF, 2225≥4.7μF
		≤5%	0201≥0.01uF, 1210≥4.7μF
		≤10%	0402≥0.012μF, 0603>0.1μF, 0805≥1μF, 1206≥2.2μF, 1210≥10μF
35V	≤3.5%	≤10%	0603≥1μF, 0805≥2.2μF, 1206≥2.2μF, 1210≥10μF
25V	≤3.5%	≤5%	0201≥0.01μF, 0805≥1μF, 1210≥10μF
		≤7%	0603≥0.33μF,
		≤10%	0201≥0.1μF, 0402≥0.056μF, 0603≥0.47μF, 0805≥2.2μF, 1206≥2.2μF, 1210≥22μF
		≤12.5%	0402≥0.47μF, 0805=10μF
16V	≤3.5%	≤5%	0201≥0.01μF, 0402≥0.033μF, 0603≥0.15μF, 0805≥0.68μF, 1206≥2.2μF, 1210≥4.7μF
		≤10%	0201≥0.1uF(0201/X7R≥0.022μF), 0402≥0.22uF, 0603≥0.15μF, 0805≥2.2μF, 1206≥4.7μF, 1210≥22μF
		≤12.5%	0402=1μF;0805=10μF
10V	≤5%	≤10%	0201≥0.012μF, 0402≥0.33μF(0402/X7R≥0.22μF), 0603≥0.33μF, 0805≥2.2μF, 1206≥2.2μF, 1210≥22μF
		≤12.5%	0805=10μF
		≤15%	0201≥0.1μF, 0402≥1μF, 0603≥10μF
6.3V	≤10%	≤15%	0201≥0.1μF, 0402≥1μF, 0603≥10μF, 0805≥4.7μF, 1206≥47μF, 1210≥100μF
		≤20%	0402≥2.2μF
4V	≤15%	---	---

Rated vol.	D.F.≦	Exception of D.F. ≦	
≧100V	≦2.5%	≦3%	1206≧0.47μF
		≦5%	0603≧0.068μF; 0805＞0.1μF; 1206≧1μF; 1210≧2.2μF
		≦10%	0805＞0.22μF; 1210≧3.3μF
50V	≦2.5%	≦3%	0201(50V); 0603≧0.047μF; 0805≧0.18μF; 1206≧0.47μF
		≦5%	0201≧0.01uF; 1210≧3.3μF
		≦10%	0402≧0.012μF; 0603>0.1μF; 0805≧1μF;1206≧2.2μF; 1210≧10μF
		≦12.5%	1206=10μF
35V	≦3.5%	≦10%	0603≧1μF; 0805≥2.2μF; 1206≧2.2μF; 1210≧10μF
25V	≦3.5%	≦5%	0201=0.01μF; 0805≧1μF
		≦7%	0603≧0.33μF
		≦10%	0201>0.01μF; 0402≧0.10μF; 0603≧0.47μF; 0805≧2.2μF; 1206≧4.7μF; 1210≧10μF
		≦12.5%	0402≧0.47μF;0805=10μF
16V	≦3.5%	≦5%	0201=0.01μF; 0402≧0.033μF; 0603≧0.15μF; 0805≧0.68μF; 1206≧2.2μF; 1210≧4.7μF
		≦10%	0201>0.01uF; 0402≧ 0.22uF; 0603>0.47μF; 0805≧2.2μF; 1206≧4.7μF; 1210≧22μF
		≦12.5%	0402≧1μF;0805=10μF
10V	≦5%	≦10%	0201≧0.012μF; 0402≧0.22μF; 0603≧0.33μF; 0805≧2.2μF; 1206≧2.2μF; 1210≧22μF;
		≦12.5%	0805=10μF
		≦15%	0201>0.1μF; 0402≧1μF; 0603≧10μF
6.3V	≦10%	≦15%	0201>0.1μF; 0402≧1μF; 0603≧10μF; 0805≧4.7μF; 1206≧47μF; 1210≧100μF
		≦20%	0402≧2.2μF
4V	≦15%	---	---

Copyright © by Prosperity Dielectrics Co., LTD. | All rights reserved.

8. RELIABILITY TEST CONDITIONS AND REQUIREMENTS

No.	Item	Test Condition	Requirements
3.	Q/D.F. (Tangent Of loss angle)		* X7S:

Rated vol.	D.F.≦	Exception of D.F. ≦	
≧100V	≦2.5%	≦3%	1206≧0.47μF
		≦5%	0603≧0.068μF;0805＞0.1μF;1206≧1μF;1210≧2.2μF
		≦10%	0805＞0.22μF;1210≧3.3μF
50V	≦2.5%	≦3%	0201(50V); 0603≧0.047μF; 0805≧0.18μF;1206≧0.47μF
		≦5%	0201≧0.01uF; 1210≧3.3μF
		≦10%	0402≧0.012μF;0603>0.1μF; 0805≧1μF; 1206≧2.2μF;1210≧10μF
35V	≦3.5%	≦10%	0603≧1μF;0805≥2.2μF;1206≧2.2μF;1210≧10μF
25V	≦3.5%	≦5%	0201≧0.01μF;0805≧1μF;1210≧10μF
		≦7%	0603≧0.33μF
		≦10%	0201≧0.1μF;0402≧0.10μF;0603≧0.47μF; 0805≧2.2μF; 1206≧4.7μF;1210≧22μF
		≦12.5%	0402≧0.47μF
16V	≦3.5%	≦5%	0201≧0.01μF;0402≧0.033μF;0603≧0.15μF; 0805≧0.68μF;1206≧2.2μF;1210≧4.7μF
		≦10%	0201≧0.1uF; 0402≧ 0.22uF; 0603>0.47μF;0805≧2.2μF;1206≧4.7μF; 1210≧22μF
10V	≦5%	≦10%	0201≧0.012μF;0402≧0.22μF; 0603≧0.33μF; 0805≧2.2μF;1206≧2.2μF;1210≧22μF
		≦15%	0201≧0.1μF; 0402≧1μF
6.3V	≦10%	≦15%	0201≧0.1μF;0402≧1μF;0603≧10μF; 0805≧4.7μF; 1206≧47μF; 1210≧100μF
		≦20%	0402≧2.2μF
4V	≦15%	---	---

* X6S:

Rated vol.	D.F. .≦	Exception of D.F. .≦	
>100V	≦2.5%	≦3%	1206≧0.47μF
		≦5%	0603≧0.068μF;0805＞0.1μF;1206≧1μF;1210≧2.2μF
		≦10%	0805＞0.22μF;1210≧3.3μF
50V	≦2.5%	≦3%	0201(50V); 0603≧0.047μF; 0805≧0.18μF;1206≧0.47μF
		≦5%	0201≧0.01uF;1210≧3.3μF
		≦10%	0402≧0.012μF;0603>0.1μF; 0805≧1μF; 1206≧2.2μF;1210≧10μF
35V	≦3.5%	≦10%	0603≧1μF;0805≥2.2μF;1206≧2.2μF;1210≧10μF
25V	≦3.5%	≦5%	0201≧0.01μF;0805≧1μF;1210≧10μF
		≦7%	0603≧0.33μF
		≦10%	0201≧0.1μF; 0402≧0.10μF;0603≧0.47μF; 0805≧2.2μF; 1206≧4.7μF;1210≧22μF
		≦12.5%	0402≧0.47μF;0805=10μF
16V	≦3.5%	≦5%	0201≧0.01μF;0402≧0.033μF;0603≧0.15μF; 0805≧0.68μF;1206≧2.2μF;1210≧4.7μF
		≦10%	0201≧0.1uF; 0402≧0.22uF; 0603>0.47μF; 0805≧2.2μF;1206≧4.7μF;1210≧22μF
		≦12.5%	0402=1μF;0805=10μF
10V	≦5%	≦10%	0201≧0.012μF;0402≧0.22μF; 0603≧0.33μF; 0805≧2.2μF;1206≧2.2μF;1210≧22μF
		≦12.5%	0805=10μF
		≦15%	0201≧0.1μF; 0402≧1μF
6.3V	≦10%	≦15%	0201≧0.1μF;0402≧0.47μF; 0603≧10μF; 0805≧4.7μF;1206≧47μF; 1210≧100μF
		≦20%	0402≧2.2μF
4V	≦15%	---	---

No.	Item	Test Condition	Requirements
4.	Temperature Coefficient (Temperature characteristic of capacitance)		

* With no electrical load.

T.C.	Operating Temp.
X7R/X7S	-55~125°C at 25°C
X6S	-55~105°C at 25°C
X5R	-55~ 85°C at 25°C

* Measurement voltage for X7R/X7S/X6S/X5R :

Size	Cap. Range	Condition
0201	Cap.<0.1μF	1V
	0.1μF≤Cap.<1μF	0.2V
	Cap.≥1μF	0.1V
0402	Cap.<0.1μF	1V
	Cap.=1μF	0.5V
	1μF<Cap.<10μF	0.2V
	Cap.≥10μF	0.1V
0603	Cap.≤1μF	1V
	1μF<Cap.≤4.7μF	0.5V
	Cap.>4.7μF	0.2V
0805	Cap.<10μF	1V
	Cap.=10μF	0.5V
	Cap.>10μF	0.2V
1206/1210	Cap.≤10μF	1V
	10μF<Cap.≤100μF	0.5V
	Cap.>100μF	0.2V

T.C.	Capacitance Change
X7R	Within ±15%
X7S	Within ±22%
X6S	Within ±22%
X5R	Within ±15%

Copyright © by Prosperity Dielectrics Co., LTD. | All rights reserved.

8. RELIABILITY TEST CONDITIONS AND REQUIREMENTS

<table>
<tr><th>No.</th><th>Item</th><th>Test Condition</th><th>Requirements</th></tr>
<tr><td>5.</td><td>Insulation Resistance</td><td>
<table>
<tr><th>Rated Vol.(V)</th><th>Apply Voltage</th><th>Charge Time</th></tr>
<tr><td>≤100</td><td>1 times of U_R</td><td>Max. 120 sec.</td></tr>
<tr><td>200≤V≤500</td><td>1 times of U_R</td><td>60 sec.</td></tr>
<tr><td>>500</td><td>500Vdc</td><td>60 sec.</td></tr>
</table>
</td><td>* ≥10GΩ or RxC≥500Ω-F, whichever is smaller.
* Except :
<table>
<tr><th>Rated voltage (X7R/X5R)</th><th>I.R.</th></tr>
<tr><td>≥100V : All X7R</td><td rowspan="7">≥10GΩ or RxC≥100Ω-F, whichever is smaller</td></tr>
<tr><td>50V : 0402>0.01μF, 0603≥1μF, 0805≥1μF, 1206≥4.7μF, 1210≥4.7μF, 1812≥10μF, 2220≥22μF</td></tr>
<tr><td>35V : 0805≥2.2μF, 1206≥2.2μF, 1210≥10μF</td></tr>
<tr><td>25V : 0402≥1μF, 0603≥2.2μF, 0805≥2.2μF, 1206≥10μF, 1210≥10μF</td></tr>
<tr><td>16V : 0201≥0.1μF, 0402≥0.22μF, 0603≥1μF, 0805≥2.2μF, 1206≥10μF, 1210≥47μF</td></tr>
<tr><td>10V : 0201≥47nF, 0402≥0.47μF, 0603≥0.47μF, 0805≥2.2μF, 1206≥4.7μF, 1210≥47μF</td></tr>
<tr><td>6.3V; 4V</td></tr>
<tr><th>Rated voltage (X7R/X7S/X6S/X5R)</th><th>I.R.</th></tr>
<tr><td>100V : 1210≥3.3μF</td><td rowspan="8">RxC≥50Ω-F</td></tr>
<tr><td>50V : 0402≥0.1μF, 0603≥2.2μF, 0805≥10μF, 1206≥10μF</td></tr>
<tr><td>35V : 0603≥1μF</td></tr>
<tr><td>25V : 0201≥0.1μF, 0402≥2.2μF, 0603≥10μF, 0805≥10μF, 1206≥22μF</td></tr>
<tr><td>16V : 0603≥10μF, 0402≥1μF, 0201≥0.22μF</td></tr>
<tr><td>10V : 0201>0.1μF, 0402≥1μF, 0603≥10μF, 0805≥47μF</td></tr>
<tr><td>6.3V : 0201≥0.1μF, 0603>4.7μF, 0805≥47μF, 1206≥10μF</td></tr>
<tr><td>4V : 0603≥22μF, 0805≥47μF, 1206≥100μF</td></tr>
<tr><td>All X7S items; All X6S items</td></tr>
</table>
</td></tr>
<tr><td>6.</td><td>Dielectric Strength</td><td>
<table>
<tr><th>Rated Voltage</th><th>Condition</th></tr>
<tr><td>≤100</td><td>2.5 times of U_R</td></tr>
<tr><td>100<V≤250</td><td>2.0 times of U_R</td></tr>
<tr><td>250<V≤500</td><td>1.5 times of U_R</td></tr>
<tr><td>400~450</td><td>1.2 times of U_R</td></tr>
<tr><td>630</td><td>1.2 times of U_R</td></tr>
</table>
* Duration : 1 to 5 sec.
* Charge and discharge current less than 50mA.
</td><td>* No evidence of damage or flash over during test.</td></tr>
<tr><td>7.</td><td>Solderability</td><td>* Solder temperature : 235±5°C for (0201~1210).
* Solder temperature : 245±5°C for (1808~2225).
* Dipping time : 2±0.5 sec.</td><td>* 75% min. coverage of all metalized area.</td></tr>
<tr><td>8.</td><td>Resistance to Soldering Heat</td><td>* Solder temperature : 260±5°C.
* Dipping time : 10±1 sec.
* Preheating : 120 to 150°C for 1 minute before immerse the capacitor in a eutectic solder.
* Before initial measurement (Class II only) : To apply de-aging at 150°C for 1hr then set for 24±2 hrs at room temp.
* Measurement to be made after keeping at room temp. for 48±4 hrs (Class II).</td><td>* No remarkable damage.
* Cap. change :
X7R/X7S/X6S/X5R : Within ±7.5%.
* D.F., I.R. : To meet initial requirements.
* 25% max. leaching on each edge.</td></tr>
<tr><td>9.</td><td>Temperature Cycle (Rapid change of temperature)</td><td>* Conduct the five cycles according to the temperatures and time.
<table>
<tr><th>Step</th><th>Temp.(°C)</th><th>Time(min.)</th></tr>
<tr><td>1</td><td>Min. operating temp. +0/-3</td><td>30±3</td></tr>
<tr><td>2</td><td>Room temp.</td><td>2~3</td></tr>
<tr><td>3</td><td>Max. operating temp. +3/-0</td><td>30±3</td></tr>
<tr><td>4</td><td>Room temp.</td><td>2~3</td></tr>
</table>
* Before initial measurement (Class II only) : To apply de-aging at 150°C for 1hr then set for 24±2 hrs at room temp.
* Measurement to be made after keeping at room temp. for 48±4 hrs (Class II).</td><td>* No remarkable damage.
* Cap. change :
X7R/X7S/X6S/X5R : Within ±7.5%.
* D.F. : ≤150% of initial requirement.
* I.R. : ≥100% of initial requirement.</td></tr>
</table>

Copyright © by Prosperity Dielectrics Co., LTD. | All rights reserved.

8. RELIABILITY TEST CONDITIONS AND REQUIREMENTS

<table>
<tr><th>No.</th><th>Item</th><th>Test Condition</th><th>Requirements</th></tr>
<tr><td>10.</td><td>Humidity (Damp Heat) Steady State</td><td>* Test temp. : 40±2°C.
* Humidity : 90~95%RH.
* Test time : 500 +24/-0hrs.
* Before initial measurement (Class II only) : To apply de-aging at 150°C for 1hr then set for 24±2 hrs at room temp.
* Measurement to be made after keeping at room temp. for 48±4 hrs (Class II).</td><td>* No remarkable damage.
* Cap. change :
X7R/X7S/X6S/X5R : Within ±12.5% for ≥10V**, within ±25% for 6.3V.
**10V : Within ±25% for 0603≥4.7μF, 0402≥1μF, 0201≥0.1μF.
* D.F. : ≤200% of initial requirement.
* I.R. : ≥10V, ≥1GΩ or R×C≥50Ω-F, whichever is smaller.
Except :
<table>
<tr><th>Rated voltage</th><th>I.R.</th></tr>
<tr><td>100V : All X7R; 1210≥3.3μF</td><td rowspan="7">≥1GΩ or RxC≥10Ω-F, whichever is smaller</td></tr>
<tr><td>50V : 0402>0.01μF, 0603≥1μF, 0805≥1μF, 1206≥4.7μF, 1210≥4.7μF</td></tr>
<tr><td>35V : 0603≥1μF, 0805≥2.2μF, 1206≥2.2μF, 1210≥10μF</td></tr>
<tr><td>25V : 0201≥0.1uF, 0402≥0.22μF, 0603≥2.2μF, 0805≥2.2μF, 1206≥10μF, 1210≥10μF</td></tr>
<tr><td>16V : 0201≥0.1uF, 0402≥0.22μF, 0603≥1μF, 0805≥2.2μF, 1206≥10μF, 1210≥47μF</td></tr>
<tr><td>10V : 0201≥47nF, 0402≥0.47μF, 0603≥0.47μF, 0805≥2.2μF, 1206≥4.7μF, 1210≥47μF</td></tr>
<tr><td>6.3V; 4V; All X6S/X7S items; Size≥1812</td></tr>
</table></td></tr>
<tr><td>11.</td><td>Humidity (Damp Heat) Load</td><td>* Test temp. : 40±2°C.
* Humidity : 90~95%RH.
* Test time : 500 +24/-0hrs.
* To apply voltage : Rated voltage (500V max.).
* Before initial measurement (Class II only) : To apply de-aging at 150°C for 1hr then set for 24±2 hrs at room temp.
* Measurement to be made after keeping at room temp. for 48±4 hrs (Class II).</td><td>* No remarkable damage.
* Cap. change :
X7R/X7S/X6S/X5R : Within ±12.5% for ≥10V**, within ±25% for 6.3V.
**10V : Within ±25% for 0603≥4.7μF, 0402≥1μF, 0201≥0.1μF.
* D.F. : ≤200% of initial requirement.
* I.R. : ≥10V, ≥500MΩ or RxC≥25Ω-F, whichever is smaller.
Except :
<table>
<tr><th>Rated voltage</th><th>I.R.</th></tr>
<tr><td>100V : All X7R; 1210≥3.3μF</td><td rowspan="7">≥500MΩ or RxC≥5Ω-F, whichever is smaller</td></tr>
<tr><td>50V : 0402>0.01μF, 0603≥1μF, 0805≥1μF, 1206≥4.7μF, 1210≥4.7μF</td></tr>
<tr><td>35V : 0603≥1μF, 0805≥2.2μF, 1206≥2.2μF, 1210≥10μF</td></tr>
<tr><td>25V : 0201≥0.1uF, 0402≥0.22μF, 0603≥2.2μF, 0805≥2.2μF, 1206≥10μF, 1210≥10μF</td></tr>
<tr><td>16V : 0201≥0.1uF, 0402≥0.22μF, 0603≥1μF, 0805≥2.2μF, 1206≥10μF, 1210≥47μF</td></tr>
<tr><td>10V : 0201≥47nF, 0402≥0.47μF, 0603≥0.47μF, 0805≥2.2μF, 1206≥4.7μF, 1210≥47μF</td></tr>
<tr><td>6.3V; 4V; All X6S/X7S items; Size≥1812</td></tr>
</table></td></tr>
</table>

著作權所有 信昌電子陶瓷股份有限公司 Prosperity Dielectrics Co., Ltd. COPYRIGHT © PROSPERITY DIELECTRICS CO., LTD. ALL RIGHTS RESERVED
PSA PASSIVE SYSTEM ALLIANCE
Xin Yong Li

Copyright © by Prosperity Dielectrics Co., LTD. | All rights reserved.

8. RELIABILITY TEST CONDITIONS AND REQUIREMENTS

No.	Item	Test Condition	Requirements
12.	**High Temperature Load (Endurance)**		

Test Condition

* Test temp. :
X7R, X7S : 125±3°C.
X6S : 105±3°C.
* To apply voltage :
(1) 10V≤Ur≤100V : 200% of rated voltage.
or ≤6.3V or Cap.≥10μF : 150% of rated voltage.
(2) 200V≤Ur≤500V : 150% of rated voltage.
(3) 400V~450V : 120% of rated voltage.
(4) =630V : 120% of rated voltage.
(5) 100% of rated voltage for below range :

Size	Dielectric	Rated	Capacitance
0201	X5R/X7R/X7S/X6S	≤10V	C≥0.1μF
		≥16V	C>0.1μF
0402	X5R/X7R/X7S/X6S	6.3V, 10V, 16V, 25V	C≥1.0μF
0603	X5R/X7R/X7S/X6S	4V	C≥22μF
		6.3V,10V	C≥4.7μF
		25V, 35V	C≥1.0μF
0805	X5R/X7R/X7S/X6S	4V	C≥47μF
		6.3V	C≥22μF
		10V~50V	C≥10μF
1206	X5R/X7R/X7S/X6	≤6.3V	C≥47μF
1210	X5R/X7R/X7S/X6	16V	C≥47μF
	X7R	≥100V	C≥3.3μF

(6) 150% of rated voltage for below range :

Size	Dielectric	Rated Voltage	Capacitance
0201	X5R/X7R/X7S/X6	16V/25V	C≥0.1μF
	X7R	16V	C≥0.022μF
0402	X5R/X7R/X7S/X6S	50V	C≥0.1μF
		10~25V	C≥0.22μF
0603	X7R	≥50V	C≥0.082μF
	X5R/X7R/X7S/X6S	10V,16V, 50V	C≥1.0μF
0805	X5R/X7R/X7S/X6	10~50V	C≥4.7μF
	X5R/X7R/X7S	50V	C≥0.47μF
		≥100V	C≥0.12μF
1206	X5R/X7R/X7S/X6	≥50V	C≥1.0μF
1210	X5R/X7R/X7S/X6	≤100V	C≥1.0μF
	X7R	>100V	C≥0.22μF
1812	X7R	≤50V	C≥4.7μF
		100V	C≥1.0μF
1825 2220 2225	X7R	≥100V	C≥1.0μF

(7) 120% of rated voltage for below range :

Size	Dielectric	Rated Voltage	Capacitance
2220	X7R	≥100V	C≥15μF

* Test time : 1000 +24/-0 hrs.
* Before initial measurement (Class II only) : To apply de-aging at 150°C for 1hr then set for 24±2 hrs at room temp.
* Measurement to be made after keeping at room temp. for 48±4 hrs (Class II).
** De-rating conditions :

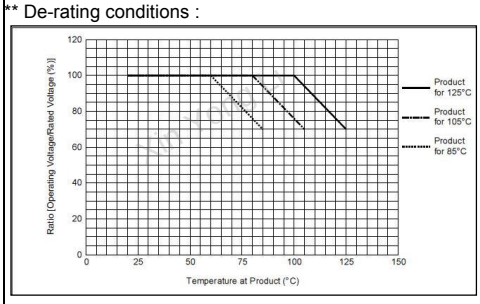

Requirements

* No remarkable damage.
* Cap. change :
X7R/X7S/X6S/X5R : Within ±12.5% for ≥10V**, within ±25% for ≤6.3V.
**10V : Within ±25% for 0603≥4.7μF, 0402≥1μF, 0201≥0.1μF.
* D.F. : ≤200% of initial requirement.
* I.R. : ≥10V, ≥1GΩ or RxC≥50Ω-F, whichever is smaller.
Except :

Rated voltage	I.R.
100V : All X7R; 1210≥3.3μF	≥1GΩ or RxC≥10Ω-F, whichever is smaller
50V : 0402>0.01μF, 0603≥1μF, 0805≥1μF, 1206≥4.7μF, 1210≥4.7μF	
35V : 0603≥1μF, 0805≥2.2μF, 1206≥2.2μF, 1210≥10μF	
25V : 0201≥0.1uF, 0402≥0.22μF, 0603≥2.2μF, 0805≥2.2μF, 1206≥10μF, 1210≥10μF	
16V : 0201≥0.1uF, 0402≥0.22μF, 0603≥1μF, 0805≥2.2μF, 1206≥10μF, 1210≥47μF	
10V : 0201≥47nF, 0402≥0.47μF, 0603≥0.47μF, 0805≥2.2μF, 1206≥4.7μF, 1210≥47μF	
6.3V; 4V; All X6S/X7S items; Size≥1812	

所有侵害必究 信昌電子陶瓷股份有限公司 PSA Prosperity Dielectrics Co., Ltd. ALL RIGHTS RESERVED.
Xin Yong Li

Copyright © by Prosperity Dielectrics Co., LTD. | All rights reserved.

8. RELIABILITY TEST CONDITIONS AND REQUIREMENTS

No.	Item	Test Condition	Requirements
13.	**Adhesive Strength of Termination (Robustness of termination)**	* Capacitors mounted on a substrate. A force of 5N(≤0603) or 10N(>0603) applied perpendicular to the place of substrate and parallel the line joining the center of terminations for 10±1 second. 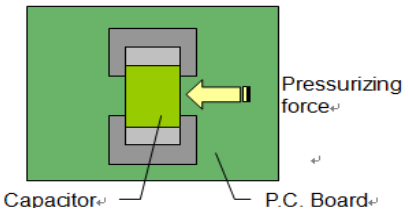 	* No remarkable damage or removal of the terminations.
14.	**Resistance to Flexure of Substrate (Substrate bending test)**	* The middle part of substrate shall be pressurized by means of the pressurizing rod at a rate of about 1mm per second until the deflection becomes 1mm. 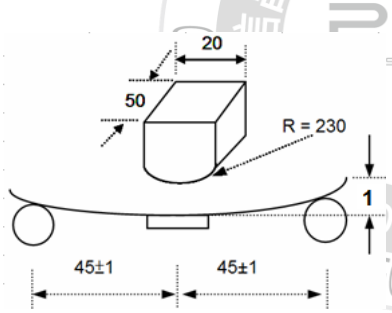 Unit : mm	* No remarkable damage. Dielectric: X7R/X7S/X6S/X5R Cap. Change: Within ±12.5% (This capacitance change means the change of capacitance under specified flexure of substrate from the capacitance measured before the test)
15.	**Vibration Resistance**	* Vibration frequency : 10~55 Hz/min. * Total amplitude : 1.5mm. * Test time : 6 hrs. (Two hrs each in three mutually perpendicular directions) * Before initial measurement (Class II only) : To apply de-aging at 150°C for 1hr then set for 24±2 hrs at room temp. * Measurement to be made after keeping at room temp. for 48±4 hrs (Class II).	* No remarkable damage. * Cap. change and D.F. : To meet initial spec.

Copyright © by Prosperity Dielectrics Co., LTD. | All rights reserved.

9. PACKAGE DIMENSION AND QUANTITY

Size	Thickness (mm)	Paper tape		Plastic tape	
		7" reel	13" reel	7" reel	13" reel
0201(0603)	0.30±0.03	15k	70k	-	-
	0.30±0.05	15k	-	-	-
	0.30±0.09	15k	-	-	-
0402(1005)	0.50±0.05	10k	50k	-	-
	0.50 +0.02/-0.05	10k	50k	-	-
	0.50±0.20	10k	-	-	-
0603(1608)	0.50±0.10	4k	-	-	-
	0.80±0.07	4k	15k	-	-
	0.80 +0.15/-0.10	4k	15k	-	-
0805(2012)	0.50±0.10	4k	15k	-	-
	0.60±0.10	4k	15k	-	-
	0.80±0.10	4k	15k	-	-
	0.85±0.10	4k	15k	-	-
	1.25±0.10	-	-	3k	10k
	1.25±0.20	-	-	3k	10k
1206(3216)	0.80±0.10	4k	15k	-	-
	0.85±0.10	4k	15k	-	-
	0.95±0.10	-	-	3k	10k
	1.15±0.15	-	-	3k	10k
	1.25±0.10	-	-	3k	10k
	1.60±0.20	-	-	2k	10k
	1.60 +0.30/-0.10	-	-	2k	9k
1210(3225)	0.85±0.10	-	-	3k	10k
	0.95±0.10	-	-	3k	10k
	1.25±0.10	-	-	3k	10k
	1.60±0.20	-	-	2k	-
	2.00±0.20	-	-	1k	6k
	2.50±0.30	-	-	1k	6k
1808(4520)	1.25±0.10	-	-	2k	10k
	1.60±0.20	-	-	2k	8k
	2.00±0.20	-	-	1k	6k
1812(4532)	1.25±0.10	-	-	1k	5k
	1.60±0.20	-	-	1k	-
	2.00±0.20	-	-	1k	-
	2.50±0.30	-	-	0.5k	3k
	2.80±0.30	-	-	0.5k	-
	3.10±0.30			0.5k	-
1825(4563)	1.60±0.20	-	-	1k	-
	2.00±0.20	-	-	1k	-
	2.50±0.30	-	-	0.5k	-
	2.80±0.30	-	-	0.5k	-
2220(5750)	1.60±0.20	-	-	1k	-
	2.00±0.20	-	-	1k	-
	2.50±0.30	-	-	0.5k	-
	2.80±0.30	-	-	0.5k	-
	3.10±0.30	-	-	-	1k
2225(5763)	1.60±0.20	-	-	1k	-
	2.00±0.20	-	-	1k	-
	2.50±0.30	-	-	0.5k	-
	2.80±0.30	-	-	0.5k	-

Unit : pcs

Copyright © by Prosperity Dielectrics Co., LTD. | All rights reserved.

9. PACKAGE DIMENSION AND QUANTITY

9.1. EMBOSSED TAPE DIMENSIONS

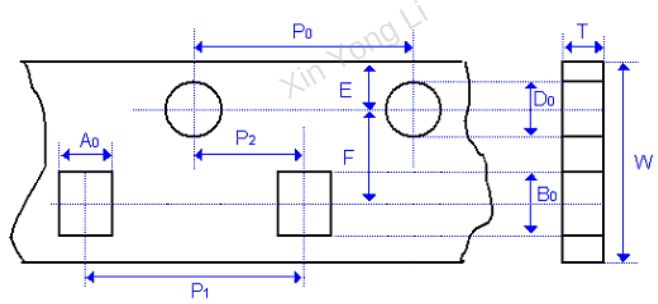

Fig. 9.1 The dimension of paper tape

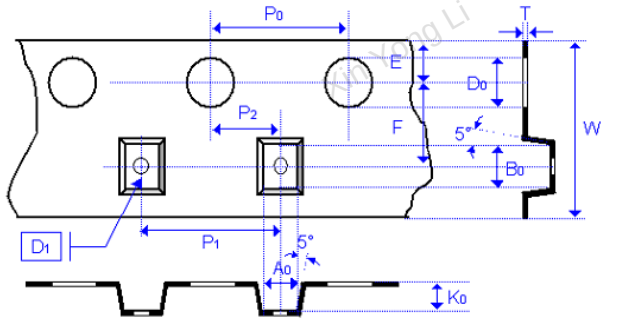

Fig. 9.2 The dimension of plastic tape

Size	0201	0402	0603	0805	
Chip Thickness	0.30±0.03	0.50±0.05 0.50±0.10	0.80±0.07 0.80 +0.15/-0.1	0.80±0.10	1.25±0.10 1.25±0.20
A_0	0.40±0.10	0.70±0.20	1.05 ±0.30	1.50±0.20	<1.80
B_0	0.70±0.10	1.20±0.20	1.80±0.30	2.30±0.20	<2.70
T	≤0.55	≤0.80	≤1.20	0.95±0.05	0.23±0.05
K_0	-	-	-	-	<2.50
W	8.00±0.30	8.00±0.30	8.00±0.30	8.00±0.10	8.00±0.10
P_0	4.00±0.10	4.00±0.10	4.00±0.10	4.00±0.10	4.00±0.10
$10xP_0$	40.00±0.10	40.00±0.10	40.00±0.20	40.00±0.20	40.00±0.20
P_1	2.00±0.05	2.00±0.05	4.00±0.10	4.00±0.10	4.00±0.10
P_2	2.00±0.05	2.00±0.05	2.00±0.05	2.00±0.05	2.00±0.05
D_0	1.50+0.1/-0	1.50+0.1/-0	1.50+0.1/-0	1.50 +0.10/-0	1.50 +0.10/-0
D_1	-	-	-	-	1.00±0.10
E	1.75±0.10	1.75±0.10	1.75±0.10	1.75±0.05	1.75±0.10
F	3.50±0.05	3.50±0.05	3.50±0.05	3.50±0.05	3.50±0.05
Unit :	mm	mm	mm	mm	mm

Size	1206			1210	
Chip Thickness	0.80±0.10	0.95±0.10 1.25±0.10	1.60±0.20 1.60+0.3/-0/1	0.95±0.10 1.25±0.10 1.60±0.20	2.50±0.30
A_0	2.00±0.10	<2.00	<2.50	<3.05	<3.20
B_0	3.50±0.50	<3.70	<4.00	<3.80	<4.00
T	0.95±0.05	0.23±0.05	0.23±0.05	0.23±0.05	0.23±0.05
K_0	-	<2.50	<2.50	<2.50	<3.50
W	8.00±0.10	8.00±0.10	8.00±0.10	8.00±0.10	8.00±0.10
P_0	4.00±0.10	4.00±0.10	4.00±0.10	4.00±0.10	4.00±0.10
$10xP_0$	40.00±0.20	40.00±0.20	40.00±0.20	40.00±0.20	40.00±0.20
P_1	4.00±0.10	4.00±0.10	4.00±0.10	4.00±0.10	4.00±0.10
P_2	2.00±0.05	2.00±0.05	2.00±0.05	2.00±0.05	2.00±0.05
D_0	1.50 +0.10/-0	1.50 +0.10/-0	1.50 +0.10/-0	1.50 +0.10/-0	1.50 +0.10/-0
D_1	-	1.00±0.10	1.50±0.10	1.50±0.10	1.00±0.10
E	1.75±0.10	1.75±0.10	1.75±0.10	1.75±0.10	1.75±0.10
F	3.50±0.05	3.50±0.05	3.50±0.05	3.50±0.05	3.50±0.05
Unit :	mm	mm	mm	mm	mm

Copyright © by Prosperity Dielectrics Co., LTD. | All rights reserved.

9. PACKAGE DIMENSION AND QUANTITY

Size	1812			1825	
Chip Thickness	1.25±0.10 1.60±0.20 2.00±0.20	2.50±0.30 2.80±0.30	3.10±0.30	1.60±0.20 2.00±0.20	2.50±0.30 2.80±0.30
A_0	<3.90	<3.90	<3.90	<6.80	<6.80
B_0	<5.30	<5.30	<5.30	<5.30	<5.30
T	0.25±0.05	0.25±0.05	0.25±0.05	0.30±0.10	0.30±0.10
K_0	<2.50	<3.00	<3.60	<2.50	<3.10
W	12.00±0.20	12.00±0.20	12.00±0.20	12.00±0.20	12.00±0.20
P_0	4.00±0.10	4.00±0.10	4.00±0.10	4.00±0.10	4.00±0.10
$10xP_0$	40.00±0.20	40.00±0.20	40.00±0.20	40.00±0.20	40.00±0.20
P_1	8.00±0.10	8.00±0.10	8.00±0.10	8.00±0.10	8.00±0.10
P_2	2.00±0.05	2.00±0.05	2.00±0.05	2.00±0.05	2.00±0.05
D_0	1.50 +0.10/-0	1.50 +0.10/-0	1.50 +0.10/-0	1.50 +0.10/-0	1.50 +0.10/-0
D_1	1.50±0.10	1.50±0.10	1.50±0.10	1.50±0.10	1.50±0.10
E	1.75±0.10	1.75±0.10	1.75±0.10	1.75±0.10	1.75±0.10
F	5.50±0.05	5.50±0.05	5.50±0.05	5.50±0.05	5.50±0.05
Unit :	mm	mm	mm	mm	mm

Size	2220			2225	
Chip Thickness	1.40±0.15 1.60±0.20 2.00±0.20	2.50±0.30 2.80±0.30	3.10±0.30	1.60±0.20 2.00±0.20	2.50±0.30 2.80±0.30
A_0	<5.80	<6.80	<5.60	<6.80	<6.80
B_0	<6.50	<6.50	<6.50	<6.50	<6.50
T	0.30±0.10	0.30±0.10	0.30±0.10	0.30±0.10	0.30±0.10
K_0	<2.50	<3.10	<4.20	<2.50	<3.10
W	12.00±0.20	12.00±0.20	12.00±0.20	12.00±0.20	12.00±0.20
P_0	4.00±0.10	4.00±0.10	4.00±0.10	4.00±0.10	4.00±0.10
$10xP_0$	40.00±0.20	40.00±0.20	40.00±0.20	40.00±0.20	40.00±0.20
P_1	8.00±0.10	8.00±0.10	8.00±0.10	8.00±0.10	8.00±0.10
P_2	2.00±0.05	2.00±0.05	2.00±0.05	2.00±0.05	2.00±0.05
D_0	1.50 +0.10/-0	1.50 +0.10/-0	1.50 +0.10/-0	1.50 +0.10/-0	1.50 +0.10/-0
D_1	1.50±0.10	1.50±0.10	1.50±0.10	1.50±0.10	1.50±0.10
E	1.75±0.10	1.75±0.10	1.75±0.10	1.75±0.10	1.75±0.10
F	5.50±0.05	5.50±0.05	5.50±0.05	5.50±0.05	5.50±0.05
Unit :	mm	mm	mm	mm	mm

Xin Yong Li

Copyright © by Prosperity Dielectrics Co., LTD. | All rights reserved.

9. PACKAGE DIMENSION AND QUANTITY

9.2. REEL DIMENSIONS

Size	0201, 0402, 0603, 0805, 1206, 1210		1808, 1812, 1825,2220,2225	2220, 2225
Reel size	7”	13”	7”	13”
C	13.0 +0.5/-0.2	13.0 +0.7/-0.3	13.0 +0.5/-0.2	13.5 ±0.5
W_1	8.4+1.5	8.4+1.5	12.2 +2.0/-0	12.2 +2.0/-0
W	14.4max	14.4max	shall accommodate tape width without interference	
A	178.0 ±0.10	330.0 ±1.0	178.0 ±0.10	330.0 ±1.0
N	60.0 +1.0/-0	100 ±1.0	60.0 +1.0/-0	100 ±1.0

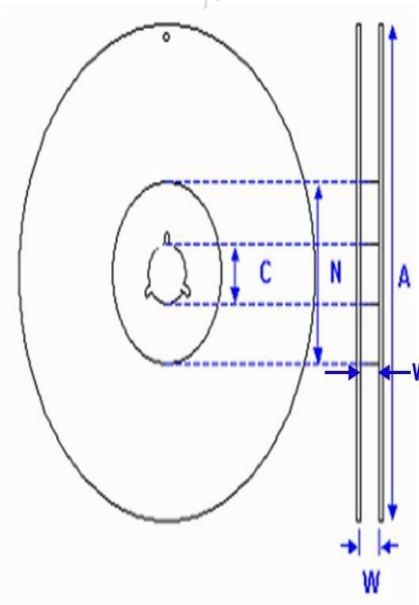

Fig. 9.3 The dimension of reel

Xin Yong Li

Copyright © by Prosperity Dielectrics Co., LTD. | All rights reserved.

10. APPLICATION NOTES

STORAGE

To prevent the damage of solderability of terminations, the following storage conditions are recommended :

Indoors under 5 ~ 40°C and 20% ~ 70% RH.

No harmful gases containing sulfuric acid, ammonia, hydrogen sulfide or chlorine.

Packaging should not be opened until the capacitors are required for use. If opened, the pack should be re-sealed as soon as is practicable. Taped product should be stored out of direct sunlight, which might promote deterioration in tape or adhesion performance. The product is recommended to be used within 12 months after shipment and checked the solderability before use.

HANDLING

Chip capacitors are dense, hard, brittle, and abrasive materials. They are liable to suffer mechanical damage, in the form of cracks or chips. Chip Capacitors should be handled with care to avoid contamination or damage. To use vacuum or plastic tweezers to pick up or plastic tweezers is recommended for manual placement. Tape and reeled packages are suitable for automatic pick and placement machine.

PREHEAT

In order to minimize the risk of thermal shock during soldering, a carefully controlled preheat is required. The rate of preheat should not exceed 3°C per second.

SOLDERING

Use mildly activated rosin fluxes do not use activated flux. The amount of solder in each solder joint should be controlled to prevent the damage of chip capacitors caused by the stress between solder, chips, and substrate.

a.) Hand soldering :

Fig. 10.1 Hand Soldering Profile

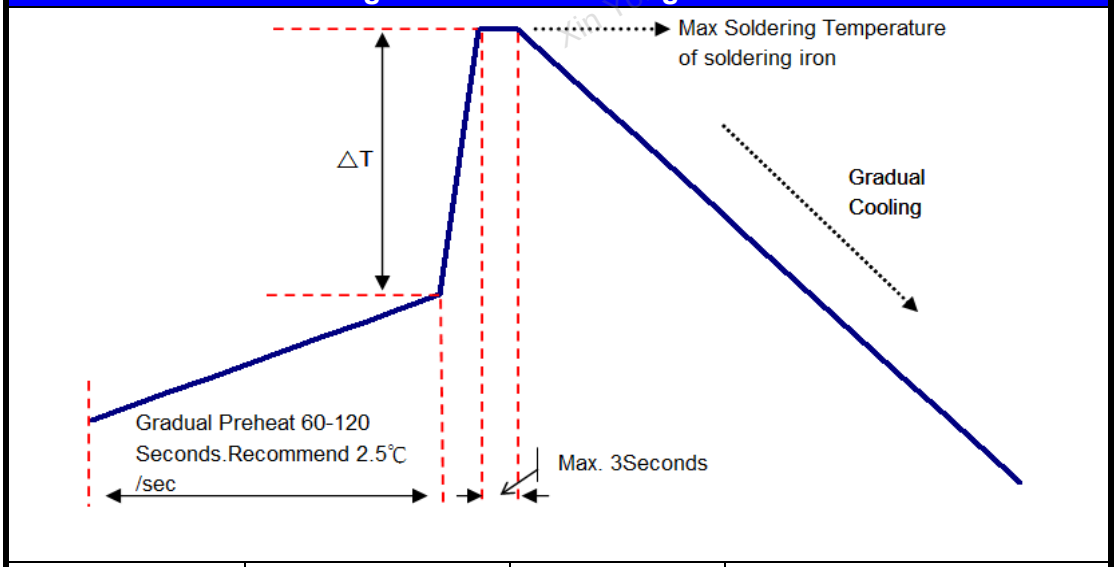

Chip Size	Pre-Heat temp.	ΔT	Max. soldering iron temp.
≤1206	≥150°C	≤150°C	≤350°C
1210~2225	≥150°C	≤130°C	≤280°C

* Soldering iron tip diameter ≤1.0 mm and wattage max. 20W.
* The Capacitors shall be pre-heated and that the temperature gradient between the devices and the tip of the soldering iron.
* The required amount of solder shall be melted on the soldering tip.
* The tip of iron should not contact the ceramic body directly.
* The Capacitors shall be cooled gradually at room temperature after soldering.
* Forced air cooling is not allowed.

Copyright © by Prosperity Dielectrics Co., LTD. | All rights reserved.

10. APPLICATION NOTES

b.) Reflow soldering :

Fig. 10.2 Reflow soldering profile

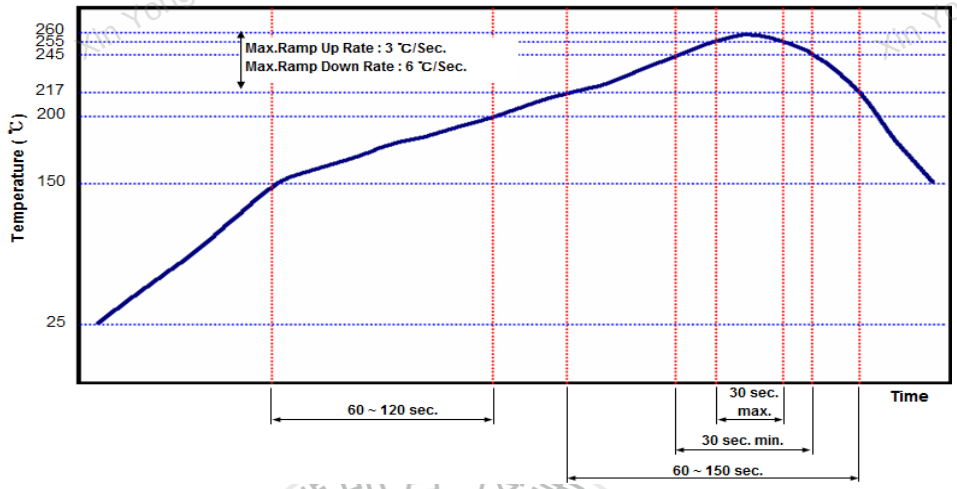

For Sn/Ag/Cu Series solder paste (Pb-Free)

c.) Wave soldering :

Fig. 10.3 Wave soldering profile

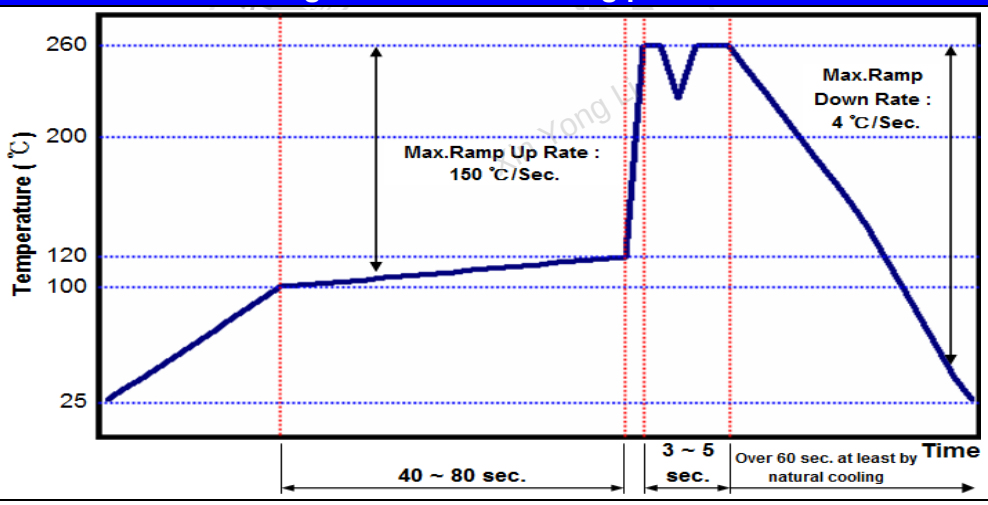

For Sn/Ag/Cu Series solder paste (Pb-Free)

Soldering conditions :

Class I :

Size Inch (mm)	Temper. Char.	Capacitance	Condition	
			Wave	Reflow
≤0402 (1005)	Class I	All	X	O
0603 (1608)	Class I	All	O	O
0805 (2012)	Class I	All	O	O
1206 (3216)	Class I	Thickness ≤ 0.95mm	O	O
		Thickness >0.95mm	X	O
≥1210 (3225)	Class I	All	X	O
Coating Products	All	All	X	O

Copyright © by Prosperity Dielectrics Co., LTD. | All rights reserved.

10. APPLICATION NOTES

Soldering conditions :
Class II :

Size Inch (mm)	Temper. Char.	Capacitance	Condition	
			Wave	Reflow
≤0402 (1005)	Class II	All	X	O
0603 (1608)	Class II	Cap. <2.2μF	O	O
		Cap. ≥2.2μF	X	O
0805 (2012)	Class II	Thickness ≤ 0.95mm	O	O
		Thickness > 0.95mm	X	O
1206 (3216)	Class II	Thickness ≤ 0.95mm	O	O
		Thickness > 0.95mm	X	O
≥1210 (3225)	Class II	All	X	O
Coating Products	All	All	X	O

Soldering height :

The solder climbing minimum height is suggesting to 25% of chip thickness or 500um whichever is less. (Reference from IPC-610E)	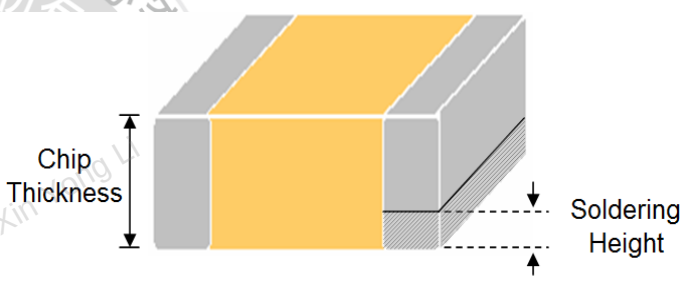

COOLING

After soldering, cool the chips and the substrate gradually to room temperature. Natural cooling in air is recommended to minimize stress in the solder joint.

CLEANING

All flux residues must be removed by using suitable electronic-grade vapor-cleaning solvents to eliminate contamination that could cause electrolytic surface corrosion. Good results can be obtained by using ultrasonic cleaning of the solvent. The choice of the proper system is depends upon many factors such as component mix, flux, and solder paste and assembly method. The ability of the cleaning system to remove flux residues and contamination from under the chips is very important.

Xin Yong Li

Copyright © by Prosperity Dielectrics Co., LTD. | All rights reserved.