MULTILAYER CERAMIC CAPACITORS

Xin Yong Li

SAMSUNG ELECTRO-MECHANICS

MULTILAYER CERAMIC CAPACITORS

Xin Yong Li

Interactive User Guide

Samsung Electro-Mechanics' MLCC Catalog was produced as an INTERACTIVE PDF that allows transferring to related webpages for better understanding of the content. Click 'HOME,' 'CONTENTS,' OR 'GO BACK TO PAGE' as needed, and it is also possible to 'PRINT' the pages. If you click the icon at the top of the page, it is possible to view a specific page of choice.

By clicking this icon, you can jump directly to the cover page of this catalog.

By clicking this icon, you can jump directly to the Table of Contents.

By clicking this icon, you can jump directly to the previous page.

By clicking this icon, you can set and print pages of your choice.

Xin Yong Li

SAMSUNG ELECTRO-MECHANICS

C O N T E N T S

Xin Yong Li

04 Explanation of Ceramic Capacitors

06 Part Numbering

09 Reliability Level Description

10 Normal Capacitors_Standard

56 Normal Capacitors_High Level Ⅰ

70 Normal Capacitors_High Level Ⅱ

72 Embedded/LSC Capacitors

74 High Bending Strength Capacitors

80 Low Acoustic Noise Capacitors

84 Low ESL Capacitors

88 Array Type Capacitors

90 Application Guide

94 Reliability Test Conditions

100 Packaging Specifications

106 Caution/Notice

127 Component sales offices/manufacturing sites

Explanation of Ceramic Capacitors

Xin Yong Li

Normal Capacitors

Normal Capacitors

Standard	High Level Ⅰ	High Level Ⅱ
	Improved Reliability (65℃, 90%RH, 1Vr, 500H)	Reinforced Reliability (85℃, 85%RH, 1Vr, 1000H)

Embedded/LSC Capacitors

Lower thickness and space saving

Embedded/LSC

High Bending Strength Capacitors

More Resistant to stress caused by board bending

High-bending Strength

Explanation of Ceramic Capacitors

Xin Yong Li

Low Acoustic Noise Capacitors

A solution that effectively reduces audible noise

Low Acoustic Noise

Low ESL Capacitors

Space Saving & High Speed Energy Transfer

Low ESL

Array Type Capacitors

Reduces mounting cost and ripple voltage

Array

Part Numbering

Xin Yong Li

CL	10	A	106	M	Q	8	N	N	N	C
1	2	3	4	5	6	7	8	9	10	11

1 SERIES CODE

CL = Multilayer Ceramic Capacitors

2 SIZE CODE

Code	mm (inch)
02	0402 (01005)
03	0603 (0201)
05	1005 (0402)
10	1608 (0603)

Code	mm (inch)
21	2012 (0805)
31	3216 (1206)
32	3225 (1210)

Code	mm (inch)
42	4520 (1808)
43	4532 (1812)
55	5750 (2220)

3 DIELECTRIC CODE

Class Ⅰ (Temperature Compensation)

Symbol	EIA Code	Operation Temperature Range (℃)	Temperature Coefficient Range (ppm/℃)
C	C0G	-55 ~ +125	0 ± 30

Class Ⅱ (High Dielectric Constant)

Symbol	EIA Code	Operation Temperature Range (℃)	Capacitance Change (ΔC %)
A	X5R	-55 ~ +85	±15
B	X7R	-55 ~ +125	±15
X	X6S	-55 ~ +105	±22
F	Y5V	-30 ~ +85	-82 ~ +22
Y	X7S	-55 ~ +125	±22
Z	X7T	-55 ~ +125	-33 ~ +22

4 CAPACITANCE CODE

Capacitance expressed in pF. 2 significant digits plus number of zeros.
example) 106=10×10^6=10,000,000pF

For Values < 10pF, Letter R denotes decimal point
example) 1R5 =1.5pF

5 CAPACITANCE TOLERANCE CODE

Code	Tolerance
N	±0.03pF
A	±0.05pF
B	±0.1pF
C	±0.25pF

Code	Tolerance
H	+ 0.25pF
L	- 0.25pF
D	±0.5pF
F*	±1pF

Code	Tolerance
F	±1%
G	±2%
J	±5%
U	+ 5%

Code	Tolerance
V	- 5%
K	±10%
M	±20%
Z	-20, +80%

*For Values < 10pF, F=±1pF / Values≥10pF, F=±1%

Part Numbering

Xin Yong Li

Series	Nominal Capcitance											
E-3	1.0				2.2				4.7			
E-6	1.0		1.5		2.2		3.3		4.7		6.8	
E-12	1.0	1.2	1.5	1.8	2.2	2.7	3.3	3.9	4.7	5.6	6.8	8.2
E-24	1.0	1.2	1.5	1.8	2.2	2.7	3.3	3.9	4.7	5.6	6.8	8.2
	1.1	1.3	1.6	2.0	2.4	3.0	3.6	4.3	5.1	6.2	7.5	9.1

6 RATED VOLTAGE CODE

Code	Voltage
S	2.5Vdc
R	4.0Vdc
Q	6.3Vdc
P	10Vdc

Code	Voltage
O	16Vdc
A	25Vdc
L	35Vdc
B	50Vdc

Code	Voltage
C	100Vdc
D	200Vdc
E	250Vdc
G	500Vdc

Code	Voltage
H	630Vdc
I	1kVdc
J	2kVdc
K	3kVdc

7 THICKNESS CODE

Size mm (inch)	Code	Thickness	Tolerance
0402 (01005)	2	0.20	±0.02
0603 (0201)	3	0.30	±0.03
1005 (0402)	3	0.30	±0.03*
	5	0.50	±0.05
1608 (0603)	5	0.50	+0.0/-0.1*
	8	0.80	±0.10
2012 (0805)	A	0.65	±0.10
	C	0.85	±0.10*
	C	0.85	±0.10
	M	1.15	±0.10
	F	1.25	±0.10
	Q	1.25	±0.15
	Y	1.25	±0.20
3216 (1206)	C	0.85	±0.15
	C	0.85	±0.10*
	E	1.10	±0.15
	E	1.10	±0.10*
	P	1.15	±0.10*
	M	1.15	±0.15
	F	1.25	±0.15
	H	1.6	±0.20

Size mm (inch)	Code	Thickness	Tolerance
3225 (1210)	C	0.85	±0.10*
	9	0.90	±0.10*
	F	1.25	±0.20
	S	1.35	±0.15*
	H	1.60	±0.20
	U	1.80	±0.20*
	I	2.00	±0.20
	J	2.50	±0.20
	V	2.50	±0.30
4520 (1808)	F	1.25	±0.20
	G	1.40	±0.20
	I	2.00	±0.20
4532 (1812)	F	1.25	±0.20
	H	1.60	±0.20
	I	2.00	±0.20
	J	2.50	±0.20
	L	3.20	±0.30
5750 (2220)	H	1.60	±0.20
	I	2.00	±0.20
	J	2.50	±0.20
	L	3.20	±0.30

* Mark is only applicable to "L","Y","F", 12th code in part number.

Part Numbering

Xin Yong Li

8 INNER ELECTRODE/TERMINATION/PLATING CODE

Code	Thickness division	Inner electrode	Termination	Plating material
N	Normal	Ni	Cu	Ni / Sn _100%
G	Normal	Cu	Cu	Ni / Sn _100%
S	Normal	Ni	Metal Epoxy	Ni / Sn _100%
C	Normal	Ni	Control Code	Ni / Sn _100%
L	Low profile	Ni	Cu	Ni / Sn _100%
Y	Low profile	Ni	Metal Epoxy	Ni / Sn _100%
Z	Normal	Ni	Metal Epoxy	Ni / Sn _100%
F	Low profile	Ni	Metal Epoxy	Ni / Sn _100%

9 PRODUCT CODE OR SIZE CONTROL CODE

N=Normal
A=Array (2-element)
B=Array (4-element)
L=LICC (Low Inductance Ceramic Capacitor)
J=SLIC (Super Low Inductance Capacitor)

(Unit : mm (inch))

Code \ Size	0402 (01005)	0603 (0201)	1005 (0402)	1608 (0603)	2012 (0805)	3216 (1206)
S	±0.03	±0.05	±0.07	±0.07		±0.30
Q	±0.05	±0.07	±0.10	±0.15	±0.15	
R	±0.07	±0.09	±0.15	±0.20	±0.20	
U	±0.09		±0.20	±0.25	±0.25	
Z			±0.40	±0.30	±0.30	
9			±0.30			

10 CONTROL CODE

N= Reserved for future use

11 PACKAGING CODE

Cardboard Tape (paper)

Code	Taping Type
8/C/H	Normal, 7"reel (Quantity option)
J	1mm Pitch, 7"reel
Z	Chip aligned for horizontal, 7"reel
Y	Chip aligned for vertical, 7"reel
O	Normal, 10"reel
3/D/L	Normal, 13"reel (Quantity option)
2	1mm Pitch, 13"reel
7	Chip aligned for vertical, 13"reel

Embossed Tape (plastic)

Code	Taping Type
E/G	Normal, 7"reel (Quantity option)
R	Chip aligned for horizontal, 7"reel
W	Chip aligned for vertical, 7"reel
S	Normal, 10"reel
F	Normal, 13"reel (Quantity option)

Reliability Level Description

Xin Yong Li

Reliability Level	Standard	High Level Ⅰ	High Level Ⅱ	AEC-Q200
Humidity Test	40℃, 95%RH, 1Vr, 500h	65℃, 90%RH, 1Vr, 500h	85℃, 85%RH, 1Vr, 1000h	85℃, 85%RH, 1.3~1.5Vr, 1000h
High Temp Load Test	Max. Temp, 1.5Vr, 1000h	Max. Temp, 1.5Vr, 1000h	Max. Temp, 1.5Vr, 1000h	Max. Temp, 2Vr, 1000h
Board Flex	1mm	1mm	2mm	2mm
Temp. Cycling	5cycle	5cycle	1000cycle	1000cycle

1. The part marked 'derating' is less than 150% of rated voltage in the durability and operational life test.
2. Some of the parts are applicable in rated voltage × 150% or × 120%. Please refer to individual specifications.
3. Some of parts are 3mm bending guaranteed. Please refer to individual specifications.

Normal Capacitors_Standard

Normal Standard

Xin Yong Li

Features

- A Normal MLCC temporarily charges and remove noise in electronic circuits, and is the most broadly available chip-type capacitor.
- The product line allows realization of various sizes and a wide range of capacitance.
- It also has the structural capacity to mount chips on a PCB at a high speed.

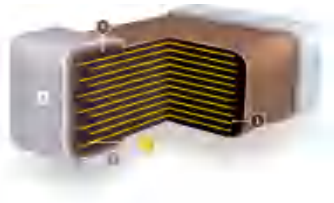

❶ Ceramic Body
❷ Electrode (Ni/Cu*)
❸ Plating (Ni)
❹ Termination (Cu or Cu+Metal Epoxy)
⑤ Plating (Sn)

* Internal Cu electrode is only applied to limited products.

Wide Selection of Size & Wide Capacitance Range
Products offered with various sizes and a wide range of capacities

Excellent DC Bias Characteristics
Capacitor with Excellent DC Bias Characteristics

High Speed Automatic Chip Placement on PCBs
Chip Mountable on PCB at High Speed

Application

- Smart Phone, PC, HDD/SSD Board, Tablet, Display, Game Machine, DC-DC Converter

Structure and Dimensions

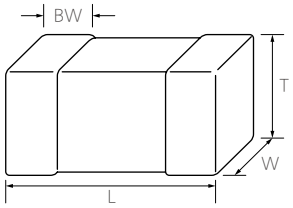

Size Code	Dimension (mm)				EIA (inch)
	L	W	T	BW	
02	0.40±0.02	0.20±0.02	0.20±0.02	0.1±0.03	01005
05025	0.50±0.025	0.25±0.025	0.25±0.025	0.13±0.04	15008
03	0.60±0.03	0.30±0.03	0.30±0.03	0.15±0.05	0201
	0.60±0.05	0.30±0.05	0.30±0.05		
	0.60±0.09	0.30±0.09	0.50±0.05		
	0.60±0.09	0.30±0.09	0.30±0.09		
05	1.00±0.05	0.50±0.05	0.50±0.05	0.25±0.10	0402
	1.00±0.05	0.50±0.05	0.30±0.03		
	1.00±0.05	0.50±0.05	0.20±0.02		
	1.00±0.07	0.50±0.07	0.50±0.07		
	1.00±0.10	0.50±0.10	0.50±0.10		
	1.00±0.10	0.50±0.10	0.30±0.03		
	1.00±0.15	0.50±0.15	0.50±0.15		
	1.00±0.15	0.50±0.15	0.30±0.03		
	1.00±0.20	0.50±0.20	0.50±0.20		
	1.00±0.20	0.50±0.25	0.70±0.10		
	1.00±0.20	0.50±0.20	0.60±0.20		
	1.00±0.20	0.50±0.20	0.50±0.05		
	1.15±0.05	0.70±0.05	0.70±0.05		

Normal Capacitors_Standard

Xin Yong Li

Size Code	Dimension (mm)				EIA (inch)
	L	W	T	BW	
10	1.60±0.10	0.80±0.10	0.80±0.10	0.30±0.20	0603
	1.60±0.10	0.80±0.10	0.50+0.00/-0.10		
	1.60±0.15	0.80±0.15	0.80±0.15		
	1.60±0.20	0.80±0.20	0.80±0.20		
	1.60±0.20	0.80±0.20	0.80±0.20		
	1.60±0.20	0.80±0.20	0.70±0.20		
	1.60±0.25	0.80±0.25	0.70±0.10		
	1.60±0.25	0.80±0.25	0.80±0.25		
	1.60±0.30	0.80±0.30	0.70±0.10		
	1.60±0.30	0.80±0.30	0.80±0.30		
	1.60±0.30	0.80±0.30	0.50±0.30		
	1.80±0.10	1.00±0.10	0.70±0.10		
21	2.00±0.10	1.25±0.10	0.65±0.10	0.5+0.2/-0.3	0805
	2.00±0.10	1.25±0.10	0.85±0.10		
	2.00±0.10	1.25±0.10	0.90±0.10		
	2.00±0.10	1.25±0.10	1.25±0.10		
	2.00±0.15	1.25±0.15	0.85±0.10		
	2.00±0.15	1.25±0.15	1.25±0.15		
	2.00±0.20	1.25±0.20	0.70±0.10		
	2.00±0.20	1.25±0.20	0.80±0.10		
	2.00±0.20	1.25±0.20	0.85±0.10		
	2.00±0.20	1.25±0.20	0.90±0.10		
	2.00±0.20	1.25±0.20	1.10±0.10		
	2.00±0.20	1.25±0.20	1.25±0.20		
31	3.20±0.15	1.60±0.15	0.85±0.15	0.50±0.30	1206
	3.20±0.15	1.60±0.15	1.25±0.15		
	3.20±0.20	1.60±0.20	0.85±0.10		
	3.20±0.20	1.60±0.20	0.90±0.10		
	3.20±0.20	1.60±0.20	1.15±0.10		
	3.20±0.20	1.60±0.20	1.15±0.15		
	3.20±0.20	1.60±0.20	1.60±0.20		
32	3.20±0.30	2.50±0.20	0.85±0.10	0.60±0.30	1210
	3.20±0.30	2.50±0.20	1.25±0.20		
	3.20±0.30	2.50±0.20	1.35±0.15		
	3.20±0.30	2.50±0.20	1.40±0.20		
	3.20±0.30	2.50±0.20	1.60±0.10		
	3.20±0.30	2.50±0.20	1.60±0.20		
	3.20±0.30	2.50±0.20	1.80±0.20		
	3.20±0.30	2.50±0.20	2.50±0.20		
	3.20±0.30	2.50±0.20	2.00±0.20		
	3.20±0.40	2.50±0.30	2.50±0.20		
	3.20±0.40	2.50±0.30	2.50±0.30		
43	4.50±0.40	3.20±0.30	1.60±0.20	0.80±0.30	1812

Normal Capacitors_Standard

Capacitance Table (C0G)

Category	TC	Size mm (inch)	Rated Voltage (Vdc)	Capacitance Range
Normal	C0G (125℃)	0402 (01005)	16	0.3pF - 27pF
		0603 (0201)	25	0.2pF - 100pF
			50	1pF - 100pF
		1005 (0402)	16	1nF - 1nF
			25	27pF - 180pF
			50	0.5pF - 1nF
			100	100pF - 100pF
		1608 (0603)	25	680pF - 3.3nF
			50	0.3pF - 5.6nF
			100	10pF - 1nF
			200	220pF - 220pF
			250	470pF - 470pF
		2012 (0805)	25	3.9nF - 4.7nF
			50	0.47pF - 10nF
			100	10pF - 2.2nF
			200	100pF - 1nF
			250	1nF - 1nF
		3216 (1206)	25	10nF - 10nF
			50	1pF - 47nF
			100	22pF - 2.2nF
			200	1nF - 1nF
			500	10pF - 1nF
			630	10pF - 3.3nF
			1000	10pF - 470pF
			2000	15pF - 100pF
		3225 (1210)	50	10nF - 11nF
			2000	100pF - 100pF

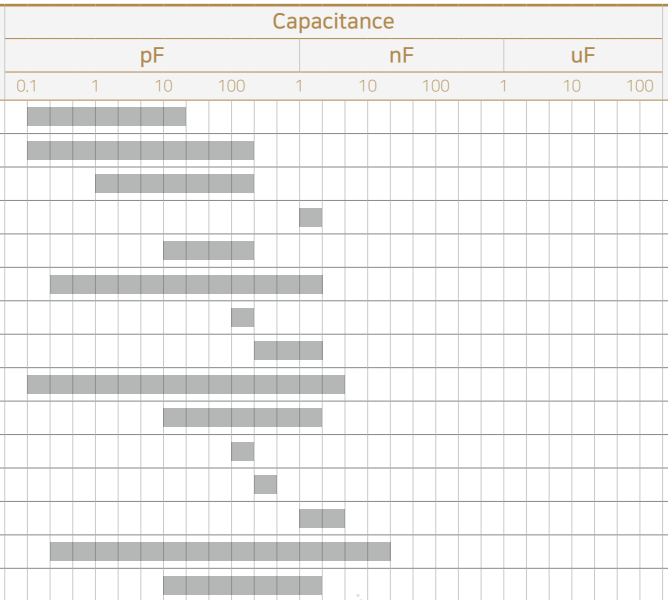

Xin Yong Li

Normal Capacitors_Standard

Capacitance Table (X5R)

Category	TC	Size mm (inch)	Rated Voltage (Vdc)	Capacitance Range
Normal	X5R (85℃)	0402 (01005)	4	100nF - 220nF
			6.3	1nF - 220nF
			10	1nF - 10nF
		05025 (015008)	6.3	1uF - 1uF
		0603 (0201)	4	1uF - 4uF
			6.3	15nF - 4.7uF
			10	4.7nF - 2.2uF
			16	100nF - 100nF
			25	4.7nF - 330nF
			35	100nF - 100nF
		1005 (0402)	4	2.2uF - 22uF
			6.3	100nF - 22uF
			10	100nF - 15uF
			16	100nF - 4.7uF
			25	100nF - 2.2uF
			35	1uF - 1uF
		1608 (0603)	4	22uF - 47uF
			6.3	1uF - 47uF
			10	220nF - 22uF
			16	470nF - 22uF
			25	100nF - 10uF
			35	1uF - 4.7uF
			50	220nF - 2.2uF
		2012 (0805)	4	47uF - 47uF
			6.3	4.7uF - 47uF
			10	1uF - 22uF
			16	1uF - 22uF
			25	1uF - 22uF
			35	4.7uF - 4.7uF
			50	1uF - 10uF
		3216 (1206)	6.3	10uF - 100uF
			10	10uF - 47uF
			16	2.2uF - 22uF
			25	3.3uF - 22uF
			35	4.7uF - 4.7uF
			50	1uF - 10uF
			100	2.2uF - 2.2uF
		3225 (1210)	6.3	22uF - 220uF
			10	10uF - 100uF
			16	10uF - 47uF
			25	10uF - 22uF
			35	4.7uF - 10uF
			50	10uF - 10uF

Xin Yong Li

Normal Capacitors_Standard

Xin Yong Li

Capacitance Table (X6S)

Category	TC	Size mm (inch)	Rated Voltage (Vdc)	Capacitance Range
Normal	X6S (105℃)	0603 (0201)	4	1uF - 1uF
			6.3	100nF - 220nF
		1005 (0402)	2.5	2.2uF - 2.2uF
			4	4.7uF - 10uF
			6.3	1uF - 2.2uF
			10	1uF - 1uF
			25	1uF - 1uF
		1608 (0603)	4	10uF - 22uF
			6.3	4.7uF - 10uF
			10	2.2uF - 10uF
			16	4.7uF - 10uF
		2012 (0805)	2.5	22uF - 22uF
			4	10uF - 47uF
			6.3	10uF - 22uF
			10	10uF - 10uF
			16	2.2uF - 10uF
			25	4.7uF - 10uF
		3216 (1206)	4	47uF - 47uF
			6.3	22uF - 47uF
			10	22uF - 22uF
			16	22uF - 22uF
			25	10uF - 22uF
			6.3	100uF - 100uF
			10	47uF - 47uF

Capacitance Table (X7R)

Category	TC	Size mm (inch)	Rated Voltage (Vdc)	Capacitance Range
Normal	X7R (125℃)	0402 (01005)	10	100pF - 1nF
			16	330pF - 330pF
		0603 (0201)	6.3	4.7nF - 10nF
			10	1.5nF - 10nF
			16	150pF - 1nF
			25	150pF - 1nF
		1005 (0402)	6.3	100nF - 470nF
			10	22nF - 470nF
			16	820pF - 220nF
			25	560pF - 100nF
			50	180pF - 100nF

Normal Capacitors_Standard

Xin Yong Li

Category	TC	Size mm (inch)	Rated Voltage (Vdc)	Capacitance Range
Normal	X7R (125℃)	1608 (0603)	6.3	470nF - 10uF
			10	220nF - 2.2uF
			16	10nF - 1uF
			25	4.7nF - 1uF
			50	100pF - 1uF
			100	1nF - 100nF
		2012 (0805)	6.3	10uF - 10uF
			10	680nF - 10uF
			16	100nF - 10uF
			25	1nF - 4.7uF
			50	180pF - 1uF
			100	220pF - 220nF
			200	220pF - 10nF
			250	1nF - 10nF
		3216 (1206)	6.3	10uF - 22uF
			10	4.7uF - 22uF
			16	330nF - 10uF
			25	220nF - 10uF
			35	10uF - 10uF
			50	330pF - 10uF
			100	2.2nF - 2.2uF
			200	470pF - 100nF
			250	33nF - 100nF
			500	220pF - 33nF
			630	330pF - 33nF
			1000	680pF - 2.2nF
			2000	1nF - 1nF
		3225 (1210)	6.3	47uF - 47uF
			10	10uF - 47uF
			16	4.7uF - 22uF
			25	1uF - 22uF
			35	10uF - 10uF
			50	150nF - 10uF
			100	1uF - 2.2uF
			250	100nF - 100nF
			500	10nF - 10nF

Normal Capacitors_Standard

Xin Yong Li

Capacitance Table (X7S)

Category	TC	Size mm (inch)	Rated Voltage (Vdc)	Capacitance Range
Normal	X7S (125℃)	1608 (0603)	6.3	10uF - 10uF
		2012 (0805)	25	4.7uF - 4.7uF

Capacitance Table (X7T)

Category	TC	Size mm (inch)	Rated Voltage (Vdc)	Capacitance Range
Normal	X7T (125℃)	2012 (0805)	6.3	22uF - 22uF

Capacitance Table (Y5V)

Category	TC	Size mm (inch)	Rated Voltage (Vdc)	Capacitance Range
Normal	Y5V (85℃)	1005 (0402)	6.3	1uF - 1uF
			10	220nF - 470nF
			16	22nF - 220nF
			25	22nF - 33nF
			50	15nF - 15nF
		1608 (0603)	6.3	2.2uF - 2.2uF
			10	2.2uF - 2.2uF
			16	100nF - 470nF
			25	100nF - 470nF
			50	10nF - 100nF
		2012 (0805)	6.3	10uF - 10uF
			10	2.2uF - 10uF
			16	2.2uF - 2.2uF
			25	100nF - 1uF
			50	47nF - 1uF
		3216 (1206)	10	10uF - 10uF
			16	1uF - 4.7uF
			25	1uF - 2.2uF
			50	220nF - 1uF
		3225 (1210)	16	10uF - 10uF
			25	10uF - 10uF
			35	10uF - 10uF

Normal Capacitors_Standard

Xin Yong Li

Product Line Up (C0G)

Size : 0.20 × 0.10mm (inch : 01005)

No.	Thickness Max. (mm)	Rated Voltage (Vdc)	TC code	Capacitance	Capacitance Tolerance	Part Number
1	0.22	16	C0G	0.3pF	±0.10pF	CL02C0R3BO2GNN#
2	0.22	16	C0G	0.4pF	±0.10pF	CL02C0R4BO2GNN#
3	0.22	16	C0G	0.5pF	±0.10pF	CL02C0R5BO2GNN#
4	0.22	16	C0G	0.9pF	±0.10pF	CL02C0R9BO2GNN#
5	0.22	16	C0G	1pF	±0.10pF	CL02C010BO2GNN#
6	0.22	16	C0G	1.2pF	±0.10pF	CL02C1R2BO2GNN#
7	0.22	16	C0G	1.5pF	±0.10pF	CL02C1R5BO2GNN#
8	0.22	16	C0G	1.6pF	±0.10pF	CL02C1R6BO2GNN#
9	0.22	16	C0G	1.7pF	±0.10pF	CL02C1R7BO2GNN#
10	0.22	16	C0G	1.8pF	±0.10pF	CL02C1R8BO2GNN#
11	0.22	16	C0G	2pF	±0.10pF	CL02C020BO2GNN#
12	0.22	16	C0G	2.4pF	±0.10pF	CL02C2R4BO2GNN#
13	0.22	16	C0G	2.9pF	±0.10pF	CL02C2R9BO2GNN#
14	0.22	16	C0G	3pF	±0.10pF	CL02C030BO2GNN#
15	0.22	16	C0G	3.3pF	±0.25pF	CL02C3R3CO2GNN#
16	0.22	16	C0G	4pF	±0.10pF	CL02C040BO2GNN#
17	0.22	16	C0G	5.6pF	±0.10pF	CL02C5R6BO2GNN#
18	0.22	16	C0G	5.6pF	±0.25pF	CL02C5R6CO2GNN#
19	0.22	16	C0G	22pF	±2%	CL02C220GO2GNN#
20	0.22	16	C0G	27pF	±5%	CL02C270JO2NNN#

Size : 0.60 × 0.30mm (inch : 0201)

No.	Thickness Max. (mm)	Rated Voltage (Vdc)	TC code	Capacitance	Capacitance Tolerance	Part Number
1	0.33	25	C0G	0.2pF	±0.10pF	CL03C0R2BA3GNN#
2	0.33	25	C0G	0.3pF	±0.10pF	CL03C0R3BA3GNN#
3	0.33	25	C0G	0.4pF	±0.10pF	CL03C0R4BA3GNN#
4	0.33	25	C0G	0.4pF	±0.25pF	CL03C0R4CA3GNN#
5	0.33	25	C0G	0.5pF	±0.10pF	CL03C0R5BA3GNN#
6	0.33	25	C0G	0.5pF	±0.25pF	CL03C0R5CA3GNN#
7	0.33	25	C0G	0.6pF	±0.10pF	CL03C0R6BA3GNN#
8	0.33	25	C0G	0.6pF	±0.25pF	CL03C0R6CA3GNN#
9	0.33	25	C0G	0.7pF	±0.10pF	CL03C0R7BA3GNN#
10	0.33	25	C0G	0.8pF	±0.10pF	CL03C0R8BA3GNN#
11	0.33	25	C0G	0.8pF	±0.25pF	CL03C0R8CA3GNN#
12	0.33	25	C0G	0.9pF	±0.10pF	CL03C0R9BA3GNN#
13	0.33	25	C0G	0.9pF	±0.25pF	CL03C0R9CA3GNN#
14	0.33	25	C0G	1pF	±0.10pF	CL03C010BA3GNN#
15	0.33	25	C0G	1pF	±0.25pF	CL03C010CA3GNN#
16	0.33	25	C0G	1.2pF	±0.10pF	CL03C1R2BA3GNN#
17	0.33	25	C0G	1.2pF	±0.25pF	CL03C1R2CA3GNN#
18	0.33	25	C0G	1.5pF	±0.25pF	CL03C1R5CA3GNN#
19	0.33	25	C0G	1.6pF	±0.10pF	CL03C1R6BA3GNN#
20	0.33	25	C0G	1.8pF	±0.10pF	CL03C1R8BA3GNN#

Normal Capacitors_Standard

Xin Yong Li

Size : 0.60 × 0.30mm (inch : 0201)

No.	Thickness Max. (mm)	Rated Voltage (Vdc)	TC code	Capacitance	Capacitance Tolerance	Part Number
21	0.33	25	C0G	1.8pF	±0.25pF	CL03C1R8CA3GNN#
22	0.33	25	C0G	2pF	±0.10pF	CL03C020BA3GNN#
23	0.33	25	C0G	2.2pF	±0.10pF	CL03C2R2BA3GNN#
24	0.33	25	C0G	2.2pF	±0.25pF	CL03C2R2CA3GNN#
25	0.33	25	C0G	2.4pF	±0.10pF	CL03C2R4BA3GNN#
26	0.33	25	C0G	2.4pF	±0.25pF	CL03C2R4CA3GNN#
27	0.33	25	C0G	2.6pF	±0.10pF	CL03C2R6BA3GNN#
28	0.33	25	C0G	2.7pF	±0.10pF	CL03C2R7BA3GNN#
29	0.33	25	C0G	2.7pF	±0.25pF	CL03C2R7CA3GNN#
30	0.33	25	C0G	3pF	±0.10pF	CL03C030BA3GNN#
31	0.33	25	C0G	3.6pF	±0.10pF	CL03C3R6BA3GNN#
32	0.33	25	C0G	3.6pF	±0.25pF	CL03C3R6CA3GNN#
33	0.33	25	C0G	3.9pF	±0.10pF	CL03C3R9BA3GNN#
34	0.33	25	C0G	4.3pF	±0.10pF	CL03C4R3BA3GNN#
35	0.33	25	C0G	4.3pF	±0.25pF	CL03C4R3CA3GNN#
36	0.33	25	C0G	4.7pF	±0.25pF	CL03C4R7CA3GNN#
37	0.33	25	C0G	5pF	±0.25pF	CL03C050CA3GNN#
38	0.33	25	C0G	5.1pF	±0.10pF	CL03C5R1BA3GNN#
39	0.33	25	C0G	5.1pF	±0.25pF	CL03C5R1CA3GNN#
40	0.33	25	C0G	5.6pF	±0.10pF	CL03C5R6BA3GNN#
41	0.33	25	C0G	5.6pF	±0.25pF	CL03C5R6CA3GNN#
42	0.33	25	C0G	6pF	±0.10pF	CL03C060BA3GNN#
43	0.33	25	C0G	6pF	±0.50pF	CL03C060DA3GNN#
44	0.33	25	C0G	6.2pF	±0.10pF	CL03C6R2BA3GNN#
45	0.33	25	C0G	6.8pF	±0.10pF	CL03C6R8BA3GNN#
46	0.33	25	C0G	6.8pF	±0.25pF	CL03C6R8CA3GNN#
47	0.33	25	C0G	7pF	±0.10pF	CL03C070BA3GNN#
48	0.33	25	C0G	7.5pF	±0.10pF	CL03C7R5BA3GNN#
49	0.33	25	C0G	8pF	±0.50pF	CL03C080DA3GNN#
50	0.33	25	C0G	8.2pF	±0.10pF	CL03C8R2BA3GNN#
51	0.33	25	C0G	8.2pF	±0.25pF	CL03C8R2CA3GNN#
52	0.33	25	C0G	9pF	±0.25pF	CL03C090CA3GNN#
53	0.33	25	C0G	9.1pF	±0.25pF	CL03C9R1CA3GNN#
54	0.33	25	C0G	10pF	±0.50pF	CL03C100DA3GNN#
55	0.33	25	C0G	10pF	±5%	CL03C100JA3GNN#
56	0.33	25	C0G	11pF	±2%	CL03C110GA3GNN#
57	0.33	25	C0G	11pF	±5%	CL03C110JA3GNN#
58	0.33	25	C0G	12pF	±5%	CL03C120JA3GNN#
59	0.33	25	C0G	12pF	±5%	CL03C120JA3NNN#
60	0.33	25	C0G	13pF	±5%	CL03C130JA3GNN#
61	0.33	25	C0G	15pF	±5%	CL03C150JA3NNN#
62	0.33	25	C0G	16pF	±2%	CL03C160GA3GNN#
63	0.33	25	C0G	16pF	±5%	CL03C160JA3GNN#
64	0.33	25	C0G	18pF	±5%	CL03C180JA3GNN#
65	0.33	25	C0G	18pF	±5%	CL03C180JA3NNN#
66	0.33	25	C0G	20pF	±5%	CL03C200JA3GNN#
67	0.33	25	C0G	22pF	±2%	CL03C220GA3GNN#

Normal Capacitors_Standard

Xin Yong Li

Size : 0.60 × 0.30mm (inch : 0201)

No.	Thickness Max. (mm)	Rated Voltage (Vdc)	TC code	Capacitance	Capacitance Tolerance	Part Number
68	0.33	25	C0G	22pF	±5%	CL03C220JA3GNN#
69	0.33	25	C0G	22pF	±5%	CL03C220JA3NNN#
70	0.33	25	C0G	24pF	±5%	CL03C240JA3GNN#
71	0.33	25	C0G	27pF	±5%	CL03C270JA3GNN#
72	0.33	25	C0G	27pF	±5%	CL03C270JA3NNN#
73	0.33	25	C0G	33pF	±5%	CL03C330JA3NNN#
74	0.33	25	C0G	39pF	±5%	CL03C390JA3NNN#
75	0.33	25	C0G	47pF	±5%	CL03C470JA3NNN#
76	0.33	25	C0G	56pF	±5%	CL03C560JA3NNN#
77	0.33	25	C0G	68pF	±5%	CL03C680JA3NNN#
78	0.33	25	C0G	82pF	±5%	CL03C820JA3NNN#
79	0.33	25	C0G	100pF	±5%	CL03C101JA3NNN#
80	0.33	50	C0G	1pF	±0.10pF	CL03C010BB3GNN#
81	0.33	50	C0G	1.2pF	±0.10pF	CL03C1R2BB3GNN#
82	0.33	50	C0G	1.5pF	±0.10pF	CL03C1R5BB3GNN#
83	0.33	50	C0G	2.7pF	±0.10pF	CL03C2R7BB3GNN#
84	0.33	50	C0G	3pF	±0.25pF	CL03C030CB3GNN#
85	0.33	50	C0G	3.3pF	±0.10pF	CL03C3R3BB3GNN#
86	0.33	50	C0G	10pF	±5%	CL03C100JB3GNN#
87	0.33	50	C0G	10pF	±5%	CL03C100JB3NNN#
88	0.33	50	C0G	33pF	±5%	CL03C330JB3NNN#
89	0.33	50	C0G	100pF	±5%	CL03C101JB3NNN#

Size : 1.00 × 0.50mm (inch : 0402)

No.	Thickness Max. (mm)	Rated Voltage (Vdc)	TC code	Capacitance	Capacitance Tolerance	Part Number
1	0.55	16	C0G	1nF	±5%	CL05C102JO5NNN#
2	0.55	25	C0G	27pF	±5%	CL05C270JA5NNN#
3	0.55	25	C0G	180pF	±5%	CL05C181JA5NNN#
4	0.55	50	C0G	0.5pF	±0.10pF	CL05C0R5BB5NNN#
5	0.55	50	C0G	0.75pF	±0.10pF	CL05CR75BB5NNN#
6	0.55	50	C0G	1pF	±0.10pF	CL05C010BB5NCN#
7	0.55	50	C0G	1pF	±0.10pF	CL05C010BB5NNN#
8	0.55	50	C0G	1pF	±0.25pF	CL05C010CB5NNN#
9	0.55	50	C0G	1.2pF	±0.10pF	CL05C1R2BB5NCN#
10	0.55	50	C0G	1.2pF	±0.10pF	CL05C1R2BB5NNN#
11	0.55	50	C0G	1.2pF	±0.25pF	CL05C1R2CB5NNN#
12	0.55	50	C0G	1.3pF	±0.10pF	CL05C1R3BB5NNN#
13	0.55	50	C0G	1.5pF	±0.10pF	CL05C1R5BB5NNN#
14	0.55	50	C0G	1.5pF	±0.25pF	CL05C1R5CB5NCN#
15	0.55	50	C0G	1.8pF	±0.10pF	CL05C1R8BB5NNN#
16	0.55	50	C0G	2.2pF	±0.10pF	CL05C2R2BB5NNN#
17	0.55	50	C0G	2.4pF	±0.10pF	CL05C2R4BB5NNN#
18	0.55	50	C0G	2.4pF	±0.25pF	CL05C2R4CB5NNN#
19	0.55	50	C0G	2.5pF	±0.10pF	CL05C2R5BB5NNN#

Normal Capacitors_Standard

Xin Yong Li

Size : 1.00 × 0.50mm (inch : 0402)

No.	Thickness Max. (mm)	Rated Voltage (Vdc)	TC code	Capacitance	Capacitance Tolerance	Part Number
20	0.55	50	C0G	2.5pF	±0.25pF	CL05C2R5CB5NNN#
21	0.55	50	C0G	2.7pF	±0.10pF	CL05C2R7BB5NNN#
22	0.55	50	C0G	3.3pF	±0.10pF	CL05C3R3BB5NNN#
23	0.55	50	C0G	3.3pF	±0.25pF	CL05C3R3CB5NNN#
24	0.55	50	C0G	3.6pF	±0.25pF	CL05C3R6CB5NNN#
25	0.55	50	C0G	3.9pF	±0.25pF	CL05C3R9CB5NNN#
26	0.55	50	C0G	4.7pF	±0.25pF	CL05C4R7CB5NNN#
27	0.55	50	C0G	5pF	±0.10pF	CL05C050BB5NNN#
28	0.55	50	C0G	5pF	±0.25pF	CL05C050CB5NNN#
29	0.55	50	C0G	5pF	±0.50pF	CL05C050DB5NNN#
30	0.55	50	C0G	5.1pF	±0.25pF	CL05C5R1CB5NNN#
31	0.55	50	C0G	5.6pF	±0.10pF	CL05C5R6BB5NNN#
32	0.55	50	C0G	5.6pF	±0.50pF	CL05C5R6DB5NNN#
33	0.55	50	C0G	6pF	±0.25pF	CL05C060CB5NNN#
34	0.55	50	C0G	6pF	±0.50pF	CL05C060DB5NNN#
35	0.55	50	C0G	6.2pF	±0.25pF	CL05C6R2CB5NNN#
36	0.55	50	C0G	6.2pF	±0.50pF	CL05C6R2DB5NNN#
37	0.55	50	C0G	6.8pF	±0.25pF	CL05C6R8CB5NNN#
38	0.55	50	C0G	7pF	±0.25pF	CL05C070CB5NNN#
39	0.55	50	C0G	7pF	±0.50pF	CL05C070DB5NNN#
40	0.55	50	C0G	8pF	±0.25pF	CL05C080CB5NNN#
41	0.55	50	C0G	8.2pF	±0.25pF	CL05C8R2CB5NNN#
42	0.55	50	C0G	9pF	±0.25pF	CL05C090CB5NNN#
43	0.55	50	C0G	9pF	±0.50pF	CL05C090DB5NNN#
44	0.55	50	C0G	10pF	±0.25pF	CL05C100CB5NCN#
45	0.55	50	C0G	10pF	±0.25pF	CL05C100CB5NNN#
46	0.55	50	C0G	10pF	±0.50pF	CL05C100DB5NCN#
47	0.55	50	C0G	10pF	±0.50pF	CL05C100DB5NNN#
48	0.55	50	C0G	10pF	±5%	CL05C100JB5NFN#
49	0.55	50	C0G	10pF	±5%	CL05C100JB5NNN#
50	0.55	50	C0G	11pF	±5%	CL05C110JB5NNN#
51	0.55	50	C0G	12pF	±2%	CL05C120GB5NNN#
52	0.55	50	C0G	12pF	±5%	CL05C120JB5NNN#
53	0.55	50	C0G	15pF	±5%	CL05C150JB5NCN#
54	0.55	50	C0G	15pF	±5%	CL05C150JB5NNN#
55	0.55	50	C0G	16pF	±5%	CL05C160JB5NCN#
56	0.55	50	C0G	18pF	±2%	CL05C180GB5NCN#
57	0.55	50	C0G	18pF	±5%	CL05C180JB5NCN#
58	0.55	50	C0G	18pF	±5%	CL05C180JB5NFN#
59	0.55	50	C0G	18pF	±5%	CL05C180JB5NNN#
60	0.55	50	C0G	20pF	±2%	CL05C200GB5NNN#
61	0.55	50	C0G	22pF	±5%	CL05C220JB5NCN#
62	0.55	50	C0G	22pF	±5%	CL05C220JB5NFN#
63	0.55	50	C0G	22pF	±5%	CL05C220JB5NNN#
64	0.55	50	C0G	24pF	±5%	CL05C240JB5NNN#
65	0.55	50	C0G	27pF	±5%	CL05C270JB5NNN#
66	0.55	50	C0G	30pF	±5%	CL05C300JB5NCN#

Normal Capacitors_Standard

Xin Yong Li

Size : 1.00 × 0.50mm (inch : 0402)

No.	Thickness Max. (mm)	Rated Voltage (Vdc)	TC code	Capacitance	Capacitance Tolerance	Part Number
67	0.55	50	C0G	33pF	±1pF	CL05C330FB5NNN#
68	0.55	50	C0G	33pF	±5%	CL05C330JB5NCN#
69	0.55	50	C0G	33pF	±5%	CL05C330JB5NFN#
70	0.55	50	C0G	33pF	±5%	CL05C330JB5NNN#
71	0.55	50	C0G	36pF	±5%	CL05C360JB5NNN#
72	0.55	50	C0G	39pF	±5%	CL05C390JB5NNN#
73	0.55	50	C0G	43pF	±5%	CL05C430JB5NNN#
74	0.55	50	C0G	47pF	±1pF	CL05C470FB5NNN#
75	0.55	50	C0G	47pF	±5%	CL05C470JB5NFN#
76	0.55	50	C0G	47pF	±5%	CL05C470JB5NNN#
77	0.55	50	C0G	56pF	±1pF	CL05C560FB5NNN#
78	0.55	50	C0G	56pF	±5%	CL05C560JB5NNN#
79	0.55	50	C0G	62pF	±5%	CL05C620JB5NNN#
80	0.55	50	C0G	68pF	±5%	CL05C680JB5NNN#
81	0.55	50	C0G	75pF	±5%	CL05C750JB5NNN#
82	0.55	50	C0G	82pF	±5%	CL05C820JB5NNN#
83	0.55	50	C0G	91pF	±5%	CL05C910JB5NNN#
84	0.55	50	C0G	100pF	±1pF	CL05C101FB5NNN#
85	0.55	50	C0G	100pF	±5%	CL05C101JB5NCN#
86	0.55	50	C0G	100pF	±5%	CL05C101JB5NFN#
87	0.55	50	C0G	100pF	±5%	CL05C101JB5NNN#
88	0.55	50	C0G	100pF	±10%	CL05C101KB5NNN#
89	0.55	50	C0G	120pF	±5%	CL05C121JB5NNN#
90	0.55	50	C0G	150pF	±5%	CL05C151JB5NNN#
91	0.55	50	C0G	180pF	±5%	CL05C181JB5NNN#
92	0.55	50	C0G	200pF	±5%	CL05C201JB5NNN#
93	0.55	50	C0G	220pF	±5%	CL05C221JB5NFN#
94	0.55	50	C0G	220pF	±5%	CL05C221JB5NNN#
95	0.55	50	C0G	270pF	±5%	CL05C271JB5NNN#
96	0.55	50	C0G	330pF	±5%	CL05C331JB5NNN#
97	0.55	50	C0G	390pF	±5%	CL05C391JB5NNN#
98	0.55	50	C0G	470pF	±5%	CL05C471JB5NFN#
99	0.55	50	C0G	470pF	±5%	CL05C471JB5NNN#
100	0.55	50	C0G	680pF	±5%	CL05C681JB5NNN#
101	0.55	50	C0G	820pF	±5%	CL05C821JB5NFN#
102	0.55	50	C0G	820pF	±5%	CL05C821JB5NNN#
103	0.55	50	C0G	1nF	±5%	CL05C102JB5NFN#
104	0.55	50	C0G	1nF	±5%	CL05C102JB5NNN#
105	0.55	100	C0G	100pF	±5%	CL05C101JC5NNN#

Normal Capacitors_Standard

Xin Yong Li

Size : 1.60 × 0.80mm (inch : 0603)

No.	Thickness Max. (mm)	Rated Voltage (Vdc)	TC code	Capacitance	Capacitance Tolerance	Part Number
1	0.90	25	C0G	680pF	±5%	CL10C681JA8NNN#
2	0.90	25	C0G	1nF	±5%	CL10C102JA8NFN#
3	0.90	25	C0G	1nF	±5%	CL10C102JA8NNN#
4	0.90	25	C0G	3.3nF	±5%	CL10C332JA8NNN#
5	0.90	50	C0G	0.3pF	±0.10pF	CL10C0R3BB8NNN#
6	0.90	50	C0G	0.5pF	±0.25pF	CL10C0R5CB8NNN#
7	0.90	50	C0G	0.56pF	±0.10pF	CL10CR56BB8NNN#
8	0.90	50	C0G	0.75pF	±0.25pF	CL10CR75CB8NNN#
9	0.90	50	C0G	0.8pF	±0.10pF	CL10C0R8BB8NNN#
10	0.90	50	C0G	1pF	±0.10pF	CL10C010BB8NNN#
11	0.90	50	C0G	1.8pF	±0.10pF	CL10C1R8BB8NNN#
12	0.90	50	C0G	2pF	±0.25pF	CL10C020CB8NNN#
13	0.90	50	C0G	2.2pF	±0.25pF	CL10C2R2CB8NNN#
14	0.90	50	C0G	2.4pF	±0.10pF	CL10C2R4BB8NNN#
15	0.90	50	C0G	2.4pF	±0.25pF	CL10C2R4CB8NNN#
16	0.90	50	C0G	3.5pF	±0.25pF	CL10C3R5CB8NNN#
17	0.90	50	C0G	3.6pF	±0.10pF	CL10C3R6BB8NNN#
18	0.90	50	C0G	3.6pF	±0.25pF	CL10C3R6CB8NNN#
19	0.90	50	C0G	4pF	±0.10pF	CL10C040BB8NNN#
20	0.90	50	C0G	4pF	±0.25pF	CL10C040CB8NNN#
21	0.90	50	C0G	4.3pF	±0.10pF	CL10C4R3BB8NNN#
22	0.90	50	C0G	4.7pF	±0.10pF	CL10C4R7BB8NNN#
23	0.90	50	C0G	5pF	±0.10pF	CL10C050BB8NNN#
24	0.90	50	C0G	5pF	±0.25pF	CL10C050CB8NFN#
25	0.90	50	C0G	5pF	±0.50pF	CL10C050DB8NNN#
26	0.90	50	C0G	5.1pF	±0.25pF	CL10C5R1CB8NNN#
27	0.90	50	C0G	5.6pF	±0.10pF	CL10C5R6BB8NNN#
28	0.90	50	C0G	5.6pF	±0.50pF	CL10C5R6DB8NNN#
29	0.90	50	C0G	6pF	±0.50pF	CL10C060DB8NNN#
30	0.90	50	C0G	6.2pF	±0.25pF	CL10C6R2CB8NNN#
31	0.90	50	C0G	6.2pF	±0.50pF	CL10C6R2DB8NNN#
32	0.90	50	C0G	6.8pF	±0.25pF	CL10C6R8CB8NNN#
33	0.90	50	C0G	7pF	±0.10pF	CL10C070BB8NNN#
34	0.90	50	C0G	7pF	±0.25pF	CL10C070CB8NNN#
35	0.90	50	C0G	7pF	±0.50pF	CL10C070DB8NNN#
36	0.90	50	C0G	7.5pF	±0.10pF	CL10C7R5BB8NNN#
37	0.90	50	C0G	7.5pF	±0.25pF	CL10C7R5CB8NNN#
38	0.90	50	C0G	7.5pF	±0.50pF	CL10C7R5DB8NNN#
39	0.90	50	C0G	8.2pF	±0.50pF	CL10C8R2DB8NNN#
40	0.90	50	C0G	9.1pF	±0.25pF	CL10C9R1CB8NNN#
41	0.90	50	C0G	9.1pF	±0.50pF	CL10C9R1DB8NNN#
42	0.90	50	C0G	10pF	±0.10pF	CL10C100BB8NNN#
43	0.90	50	C0G	10pF	±0.25pF	CL10C100CB8NNN#
44	0.90	50	C0G	10pF	±1pF	CL10C100FB8NNN#
45	0.90	50	C0G	10pF	±5%	CL10C100JB8NCN#
46	0.90	50	C0G	10pF	±5%	CL10C100JB8NFN#
47	0.90	50	C0G	10pF	±5%	CL10C100JB8NNN#
48	0.90	50	C0G	10pF	±10%	CL10C100KB8NNN#
49	0.90	50	C0G	11pF	±5%	CL10C110JB8NNN#

Normal Capacitors_Standard

Xin Yong Li

Size : 1.60 × 0.80mm (inch : 0603)

No.	Thickness Max. (mm)	Rated Voltage (Vdc)	TC code	Capacitance	Capacitance Tolerance	Part Number
50	0.90	50	C0G	12pF	±5%	CL10C120JB8NFN#
51	0.90	50	C0G	12pF	±5%	CL10C120JB8NNN#
52	0.90	50	C0G	13pF	±5%	CL10C130JB8NNN#
53	0.90	50	C0G	14pF	±5%	CL10C140JB8NNN#
54	0.90	50	C0G	15pF	±1pF	CL10C150FB8NNN#
55	0.90	50	C0G	15pF	±5%	CL10C150JB8NCN#
56	0.90	50	C0G	15pF	±5%	CL10C150JB8NFN#
57	0.90	50	C0G	15pF	±5%	CL10C150JB8NNN#
58	0.90	50	C0G	15pF	±10%	CL10C150KB8NNN#
59	0.90	50	C0G	16pF	±5%	CL10C160JB8NFN#
60	0.90	50	C0G	18pF	±5%	CL10C180JB8NFN#
61	0.90	50	C0G	18pF	±5%	CL10C180JB8NNN#
62	0.90	50	C0G	20pF	±5%	CL10C200JB8NCN#
63	0.90	50	C0G	20pF	±5%	CL10C200JB8NFN#
64	0.90	50	C0G	20pF	±5%	CL10C200JB8NNN#
65	0.90	50	C0G	22pF	±5%	CL10C220JB8NFN#
66	0.90	50	C0G	22pF	±5%	CL10C220JB8NNN#
67	0.90	50	C0G	24pF	±5%	CL10C240JB8NCN#
68	0.90	50	C0G	25pF	±5%	CL10C250JB8NNN#
69	0.90	50	C0G	27pF	±1pF	CL10C270FB8NNN#
70	0.90	50	C0G	27pF	±2%	CL10C270GB8NNN#
71	0.90	50	C0G	27pF	±5%	CL10C270JB8NFN#
72	0.90	50	C0G	27pF	±5%	CL10C270JB8NNN#
73	0.90	50	C0G	30pF	±1pF	CL10C300FB8NNN#
74	0.90	50	C0G	30pF	±5%	CL10C300JB8NCN#
75	0.90	50	C0G	33pF	±1pF	CL10C330FB8NNN#
76	0.90	50	C0G	33pF	±2%	CL10C330GB8NNN#
77	0.90	50	C0G	33pF	±5%	CL10C330JB8NFN#
78	0.90	50	C0G	33pF	±5%	CL10C330JB8NNN#
79	0.90	50	C0G	33pF	±10%	CL10C330KB8NNN#
80	0.90	50	C0G	39pF	±2%	CL10C390GB8NNN#
81	0.90	50	C0G	39pF	±5%	CL10C390JB8NCN#
82	0.90	50	C0G	43pF	±5%	CL10C430JB8NNN#
83	0.90	50	C0G	47pF	±1pF	CL10C470FB8NNN#
84	0.90	50	C0G	47pF	±2%	CL10C470GB8NNN#
85	0.90	50	C0G	47pF	±5%	CL10C470JB8NFN#
86	0.90	50	C0G	47pF	±5%	CL10C470JB8NNN#
87	0.90	50	C0G	51pF	±5%	CL10C510JB8NNN#
88	0.90	50	C0G	56pF	±1pF	CL10C560FB8NNN#
89	0.90	50	C0G	56pF	±5%	CL10C560JB8NFN#
90	0.90	50	C0G	56pF	±5%	CL10C560JB8NNN#
91	0.90	50	C0G	62pF	±5%	CL10C620JB8NNN#
92	0.90	50	C0G	68pF	±2%	CL10C680GB8NNN#
93	0.90	50	C0G	68pF	±5%	CL10C680JB8NFN#
94	0.90	50	C0G	68pF	±5%	CL10C680JB8NNN#
95	0.90	50	C0G	82pF	±2%	CL10C820GB8NNN#
96	0.90	50	C0G	82pF	±5%	CL10C820JB8NFN#
97	0.90	50	C0G	91pF	±5%	CL10C910JB8NNN#
98	0.90	50	C0G	100pF	±2%	CL10C101GB8NNN#

Normal Capacitors_Standard

Xin Yong Li

Size : 1.60 × 0.80mm (inch : 0603)

No.	Thickness Max. (mm)	Rated Voltage (Vdc)	TC code	Capacitance	Capacitance Tolerance	Part Number
99	0.90	50	C0G	100pF	±5%	CL10C101JB8NCN#
100	0.90	50	C0G	100pF	±5%	CL10C101JB8NFN#
101	0.90	50	C0G	100pF	±5%	CL10C101JB8NNN#
102	0.90	50	C0G	110pF	±5%	CL10C111JB8NNN#
103	0.90	50	C0G	120pF	±1pF	CL10C121FB8NNN#
104	0.90	50	C0G	120pF	±5%	CL10C121JB8NCN#
105	0.90	50	C0G	120pF	±5%	CL10C121JB8NFN#
106	0.90	50	C0G	120pF	±5%	CL10C121JB8NNN#
107	0.90	50	C0G	150pF	±1pF	CL10C151FB8NNN#
108	0.90	50	C0G	150pF	±2%	CL10C151GB8NNN#
109	0.90	50	C0G	150pF	±5%	CL10C151JB8NCN#
110	0.90	50	C0G	150pF	±5%	CL10C151JB8NFN#
111	0.90	50	C0G	150pF	±5%	CL10C151JB8NNN#
112	0.90	50	C0G	160pF	±5%	CL10C161JB8NNN#
113	0.90	50	C0G	180pF	±1pF	CL10C181FB8NNN#
114	0.90	50	C0G	180pF	±5%	CL10C181JB8NFN#
115	0.90	50	C0G	180pF	±5%	CL10C181JB8NNN#
116	0.90	50	C0G	200pF	±5%	CL10C201JB8NNN#
117	0.90	50	C0G	220pF	±1pF	CL10C221FB8NNN#
118	0.90	50	C0G	220pF	±2%	CL10C221GB8NNN#
119	0.90	50	C0G	220pF	±5%	CL10C221JB8NCN#
120	0.90	50	C0G	220pF	±5%	CL10C221JB8NFN#
121	0.90	50	C0G	220pF	±5%	CL10C221JB8NNN#
122	0.90	50	C0G	220pF	±10%	CL10C221KB8NNN#
123	0.90	50	C0G	240pF	±5%	CL10C241JB8NNN#
124	0.90	50	C0G	270pF	±2%	CL10C271GB8NNN#
125	0.90	50	C0G	270pF	±5%	CL10C271JB8NNN#
126	0.90	50	C0G	330pF	±1pF	CL10C331FB8NNN#
127	0.90	50	C0G	330pF	±2%	CL10C331GB8NNN#
128	0.90	50	C0G	330pF	±5%	CL10C331JB8NFN#
129	0.90	50	C0G	330pF	±5%	CL10C331JB8NNN#
130	0.90	50	C0G	360pF	±5%	CL10C361JB8NNN#
131	0.90	50	C0G	390pF	±5%	CL10C391JB8NFN#
132	0.90	50	C0G	430pF	±5%	CL10C431JB8NNN#
133	0.90	50	C0G	470pF	±5%	CL10C471JB8NCN#
134	0.90	50	C0G	470pF	±5%	CL10C471JB8NFN#
135	0.90	50	C0G	470pF	±5%	CL10C471JB8NNN#
136	0.90	50	C0G	510pF	±5%	CL10C511JB8NNN#
137	0.90	50	C0G	560pF	±5%	CL10C561JB8NFN#
138	0.90	50	C0G	560pF	±5%	CL10C561JB8NNN#
139	0.90	50	C0G	680pF	±1pF	CL10C681FB8NNN#
140	0.90	50	C0G	680pF	±5%	CL10C681JB8NFN#
141	0.90	50	C0G	680pF	±5%	CL10C681JB8NNN#
142	0.90	50	C0G	750pF	±5%	CL10C751JB8NNN#
143	0.90	50	C0G	820pF	±5%	CL10C821JB8NFN#
144	0.90	50	C0G	1nF	±1pF	CL10C102FB8NNN#
145	0.90	50	C0G	1nF	±5%	CL10C102JB8NFN#
146	0.90	50	C0G	1nF	±5%	CL10C102JB8NNN#
147	0.90	50	C0G	1.2nF	±5%	CL10C122JB8NNN#
148	0.90	50	C0G	1.5nF	±5%	CL10C152JB8NFN#

Normal Capacitors_Standard

Xin Yong Li

Size : 1.60 × 0.80mm (inch : 0603)

No.	Thickness Max. (mm)	Rated Voltage (Vdc)	TC code	Capacitance	Capacitance Tolerance	Part Number
149	0.90	50	C0G	1.5nF	±5%	CL10C152JB8NNN#
150	0.90	50	C0G	1.8nF	±5%	CL10C182JB8NFN#
151	0.90	50	C0G	1.8nF	±5%	CL10C182JB8NNN#
152	0.90	50	C0G	2.2nF	±5%	CL10C222JB8NFN#
153	0.90	50	C0G	2.2nF	±5%	CL10C222JB8NNN#
154	0.90	50	C0G	2.7nF	±5%	CL10C272JB8NNN#
155	0.90	50	C0G	3.3nF	±5%	CL10C332JB8NFN#
156	0.90	50	C0G	3.3nF	±5%	CL10C332JB8NNN#
157	0.90	50	C0G	4.7nF	±5%	CL10C472JB8NNN#
158	0.90	50	C0G	5.6nF	±5%	CL10C562JB8NNN#
159	0.90	100	C0G	10pF	±5%	CL10C100JC8NNN#
160	0.90	100	C0G	12pF	±5%	CL10C120JC8NNN#
161	0.90	100	C0G	47pF	±5%	CL10C470JC8NNN#
162	0.90	100	C0G	68pF	±5%	CL10C680JC8NNN#
163	0.90	100	C0G	100pF	±5%	CL10C101JC8NNN#
164	0.90	100	C0G	220pF	±10%	CL10C221KC8NNN#
165	0.90	100	C0G	330pF	±5%	CL10C331JC8NNN#
166	0.90	100	C0G	470pF	±5%	CL10C471JC8NFN#
167	0.90	100	C0G	470pF	±5%	CL10C471JC8NNN#
168	0.90	100	C0G	1nF	±5%	CL10C102JC8NNN#
169	0.90	200	C0G	220pF	±10%	CL10C221KD8NNN#
170	0.90	250	C0G	470pF	±5%	CL10C471JE8NNN#

Size : 2.00 × 1.25mm (inch : 0805)

No.	Thickness Max. (mm)	Rated Voltage (Vdc)	TC code	Capacitance	Capacitance Tolerance	Part Number
1	0.75	25	C0G	3.9nF	±5%	CL21C392JAANNN#
2	1.35	25	C0G	4.7nF	±5%	CL21C472JAFNNN#
3	0.75	50	C0G	0.47pF	±0.10pF	CL21CR47BBANNN#
4	0.75	50	C0G	0.47pF	±0.25pF	CL21CR47CBANNN#
5	0.75	50	C0G	0.68pF	±0.10pF	CL21CR68BBANNN#
6	0.75	50	C0G	1pF	±0.10pF	CL21C010BBANNN#
7	0.75	50	C0G	1.2pF	±0.10pF	CL21C1R2BBANNN#
8	0.75	50	C0G	1.2pF	±0.25pF	CL21C1R2CBANNN#
9	0.75	50	C0G	1.5pF	±0.10pF	CL21C1R5BBANNN#
10	0.75	50	C0G	1.5pF	±0.25pF	CL21C1R5CBANNN#
11	0.75	50	C0G	1.8pF	±0.10pF	CL21C1R8BBANNN#
12	0.75	50	C0G	1.8pF	±0.25pF	CL21C1R8CBANNN#
13	0.75	50	C0G	2.2pF	±0.10pF	CL21C2R2BBANNN#
14	0.75	50	C0G	2.4pF	±0.25pF	CL21C2R4CBANNN#
15	0.75	50	C0G	2.5pF	±0.25pF	CL21C2R5CBANNN#
16	0.75	50	C0G	2.7pF	±0.10pF	CL21C2R7BBANNN#
17	0.75	50	C0G	2.7pF	±0.25pF	CL21C2R7CBANNN#
18	0.75	50	C0G	3pF	±0.10pF	CL21C030BBANNN#
19	0.75	50	C0G	3pF	±0.25pF	CL21C030CBANNN#
20	0.75	50	C0G	3.9pF	±0.25pF	CL21C3R9CBANNN#
21	0.75	50	C0G	4.7pF	±0.10pF	CL21C4R7BBANNN#

Normal Capacitors_Standard

Size : 2.00 × 1.25mm (inch : 0805)

No.	Thickness Max. (mm)	Rated Voltage (Vdc)	TC code	Capacitance	Capacitance Tolerance	Part Number
22	0.75	50	C0G	5pF	±0.25pF	CL21C050CBANNN#
23	0.75	50	C0G	5.6pF	±0.10pF	CL21C5R6BBANNN#
24	0.75	50	C0G	5.6pF	±0.25pF	CL21C5R6CBANNN#
25	0.75	50	C0G	5.6pF	±0.50pF	CL21C5R6DBANNN#
26	0.75	50	C0G	6pF	±0.25pF	CL21C060CBANNN#
27	0.75	50	C0G	6pF	±0.50pF	CL21C060DBANNN#
28	0.75	50	C0G	6.8pF	±0.25pF	CL21C6R8CBANNN#
29	0.75	50	C0G	6.8pF	±0.50pF	CL21C6R8DBANNN#
30	0.75	50	C0G	7pF	±0.25pF	CL21C070CBANNN#
31	0.75	50	C0G	8pF	±0.25pF	CL21C080CBANNN#
32	0.75	50	C0G	8pF	±0.50pF	CL21C080DBANNN#
33	0.75	50	C0G	8.2pF	±0.50pF	CL21C8R2DBANNN#
34	0.75	50	C0G	9pF	±0.25pF	CL21C090CBANNN#
35	0.75	50	C0G	9pF	±0.50pF	CL21C090DBANNN#
36	0.75	50	C0G	10pF	±0.25pF	CL21C100CBANNN#
37	0.75	50	C0G	10pF	±5%	CL21C100JBANFN#
38	0.75	50	C0G	12pF	±1pF	CL21C120FBANNN#
39	0.75	50	C0G	13pF	±5%	CL21C130JBANNN#
40	0.75	50	C0G	15pF	±2%	CL21C150GBANNN#
41	0.75	50	C0G	20pF	±5%	CL21C200JBANNN#
42	0.75	50	C0G	22pF	±1pF	CL21C220FBANNN#
43	0.75	50	C0G	22pF	±2%	CL21C220GBANNN#
44	0.75	50	C0G	22pF	±5%	CL21C220JBANFN#
45	0.75	50	C0G	22pF	±5%	CL21C220JBANNN#
46	0.75	50	C0G	24pF	±5%	CL21C240JBANNN#
47	0.75	50	C0G	33pF	±5%	CL21C330JBANFN#
48	0.75	50	C0G	33pF	±10%	CL21C330KBANNN#
49	0.75	50	C0G	36pF	±5%	CL21C360JBANNN#
50	0.75	50	C0G	39pF	±5%	CL21C390JBANNN#
51	0.75	50	C0G	43pF	±5%	CL21C430JBANNN#
52	0.75	50	C0G	47pF	±1pF	CL21C470FBANNN#
53	0.75	50	C0G	47pF	±5%	CL21C470JBANFN#
54	0.75	50	C0G	47pF	±5%	CL21C470JBANNN#
55	0.75	50	C0G	51pF	±5%	CL21C510JBANNN#
56	0.75	50	C0G	62pF	±5%	CL21C620JBANNN#
57	0.75	50	C0G	68pF	±1pF	CL21C680FBANNN#
58	0.75	50	C0G	68pF	±2%	CL21C680GBANNN#
59	0.75	50	C0G	75pF	±5%	CL21C750JBANNN#
60	0.75	50	C0G	82pF	±2%	CL21C820GBANNN#
61	0.75	50	C0G	91pF	±5%	CL21C910JBANNN#
62	0.75	50	C0G	100pF	±5%	CL21C101JBANFN#
63	0.75	50	C0G	100pF	±5%	CL21C101JBANNN#
64	0.75	50	C0G	100pF	±10%	CL21C101KBANFN#
65	0.75	50	C0G	150pF	±1pF	CL21C151FBANNN#
66	0.75	50	C0G	150pF	±5%	CL21C151JBANFN#
67	0.75	50	C0G	150pF	±5%	CL21C151JBANNN#
68	0.75	50	C0G	180pF	±5%	CL21C181JBANNN#

Xin Yong Li

Normal Capacitors_Standard

Xin Yong Li

Size : 2.00 × 1.25mm (inch : 0805)

No.	Thickness Max. (mm)	Rated Voltage (Vdc)	TC code	Capacitance	Capacitance Tolerance	Part Number
69	0.75	50	C0G	200pF	±5%	CL21C201JBANNN#
70	0.75	50	C0G	220pF	±1pF	CL21C221FBANNN#
71	0.75	50	C0G	220pF	±2%	CL21C221GBANNN#
72	0.75	50	C0G	220pF	±5%	CL21C221JBANFN#
73	0.75	50	C0G	220pF	±5%	CL21C221JBANNN#
74	0.75	50	C0G	270pF	±2%	CL21C271GBANNN#
75	0.75	50	C0G	270pF	±5%	CL21C271JBANNN#
76	0.75	50	C0G	300pF	±5%	CL21C301JBANNN#
77	0.75	50	C0G	330pF	±1pF	CL21C331FBANNN#
78	0.75	50	C0G	330pF	±2%	CL21C331GBANNN#
79	0.75	50	C0G	330pF	±5%	CL21C331JBANFN#
80	0.75	50	C0G	360pF	±5%	CL21C361JBANNN#
81	0.75	50	C0G	390pF	±2%	CL21C391GBANNN#
82	0.75	50	C0G	390pF	±5%	CL21C391JBANNN#
83	0.75	50	C0G	430pF	±5%	CL21C431JBANNN#
84	0.75	50	C0G	470pF	±1pF	CL21C471FBANNN#
85	0.75	50	C0G	470pF	±2%	CL21C471GBANNN#
86	0.75	50	C0G	470pF	±5%	CL21C471JBANFN#
87	0.95	50	C0G	620pF	±5%	CL21C621JBCNNN#
88	0.75	50	C0G	680pF	±5%	CL21C681JBANNN#
89	0.95	50	C0G	680pF	±5%	CL21C681JBCNFN#
90	0.95	50	C0G	910pF	±5%	CL21C911JBCNNN#
91	0.95	50	C0G	1nF	±2%	CL21C102GBCNNN#
92	0.95	50	C0G	1nF	±5%	CL21C102JBCNFN#
93	1.35	50	C0G	1.2nF	±5%	CL21C122JBFNNN#
94	1.35	50	C0G	1.5nF	±5%	CL21C152JBFNFN#
95	1.35	50	C0G	1.8nF	±5%	CL21C182JBFNNN#
96	1.35	50	C0G	2.2nF	±2%	CL21C222GBFNNN#
97	1.35	50	C0G	2.2nF	±5%	CL21C222JBFNFN#
98	1.35	50	C0G	2.2nF	±5%	CL21C222JBFNNN#
99	1.35	50	C0G	2.7nF	±5%	CL21C272JBFNNN#
100	1.35	50	C0G	4.7nF	±5%	CL21C472JBFNFN#
101	1.35	50	C0G	4.7nF	±5%	CL21C472JBFNNN#
102	1.35	50	C0G	5.6nF	±5%	CL21C562JBFNNN#
103	1.35	50	C0G	10nF	±5%	CL21C103JBFNFN#
104	1.35	50	C0G	10nF	±5%	CL21C103JBFNNN#
105	0.75	100	C0G	10pF	±0.25pF	CL21C100CCANNN#
106	0.75	100	C0G	18pF	±2%	CL21C180GCANNN#
107	0.75	100	C0G	27pF	±5%	CL21C270JCANNN#
108	0.75	100	C0G	47pF	±5%	CL21C470JCANNN#
109	0.75	100	C0G	68pF	±5%	CL21C680JCANNN#
110	0.75	100	C0G	100pF	±5%	CL21C101JCANNN#
111	0.75	100	C0G	150pF	±1pF	CL21C151FCANNN#
112	0.75	100	C0G	330pF	±5%	CL21C331JCANNN#
113	0.95	100	C0G	470pF	±5%	CL21C471JCCNFN#
114	0.95	100	C0G	680pF	±5%	CL21C681JCCNNN#
115	1.35	100	C0G	1nF	±5%	CL21C102JCFNNN#

Normal Capacitors_Standard

Xin Yong Li

Size : 2.00 × 1.25mm (inch : 0805)

No.	Thickness Max. (mm)	Rated Voltage (Vdc)	TC code	Capacitance	Capacitance Tolerance	Part Number
116	1.35	100	C0G	2.2nF	±5%	CL21C222JCFNNN#
117	0.95	200	C0G	100pF	±5%	CL21C101JDCNFN#
118	0.95	200	C0G	100pF	±5%	CL21C101JDCNNN#
119	0.95	200	C0G	120pF	±5%	CL21C121JDCNNN#
120	0.95	200	C0G	220pF	±5%	CL21C221JDCNFN#
121	0.95	200	C0G	220pF	±5%	CL21C221JDCNNN#
122	1.35	200	C0G	1nF	±5%	CL21C102JDFNFN#
123	1.35	250	C0G	1nF	±5%	CL21C102JEFNFN#
124	1.35	250	C0G	1nF	±5%	CL21C102JEFNNN#

Size : 3.20 × 1.60mm (inch : 1206)

No.	Thickness Max. (mm)	Rated Voltage (Vdc)	TC code	Capacitance	Capacitance Tolerance	Part Number
1	1.40	25	C0G	10nF	±5%	CL31C103JAFNNN#
2	1.00	50	C0G	1pF	±0.25pF	CL31C010CBCNNN#
3	1.00	50	C0G	2.2pF	±0.25pF	CL31C2R2CBCNNN#
4	1.00	50	C0G	3.9pF	±0.10pF	CL31C3R9BBCNNN#
5	1.00	50	C0G	4.7pF	±0.25pF	CL31C4R7CBCNNN#
6	1.00	50	C0G	6.8pF	±0.25pF	CL31C6R8CBCNNN#
7	1.00	50	C0G	10pF	±0.50pF	CL31C100DBCNNN#
8	1.00	50	C0G	10pF	±5%	CL31C100JBCNNN#
9	1.00	50	C0G	12pF	±5%	CL31C120JBCNNN#
10	1.00	50	C0G	15pF	±5%	CL31C150JBCNNN#
11	1.00	50	C0G	18pF	±5%	CL31C180JBCNNN#
12	1.00	50	C0G	20pF	±5%	CL31C200JBCNNN#
13	1.00	50	C0G	22pF	±5%	CL31C220JBCNNN#
14	1.00	50	C0G	27pF	±1pF	CL31C270FBCNNN#
15	1.00	50	C0G	27pF	±5%	CL31C270JBCNNN#
16	1.00	50	C0G	30pF	±5%	CL31C300JBCNNN#
17	1.00	50	C0G	56pF	±5%	CL31C560JBCNNN#
18	1.00	50	C0G	82pF	±5%	CL31C820JBCNNN#
19	1.00	50	C0G	100pF	±1pF	CL31C101FBCNNN#
20	1.00	50	C0G	100pF	±5%	CL31C101JBCNFN#
21	1.00	50	C0G	100pF	±10%	CL31C101KBCNNN#
22	1.00	50	C0G	120pF	±5%	CL31C121JBCNNN#
23	1.00	50	C0G	180pF	±5%	CL31C181JBCNNN#
24	1.00	50	C0G	220pF	±5%	CL31C221JBCNFN#
25	1.00	50	C0G	220pF	±5%	CL31C221JBCNNN#
26	1.00	50	C0G	270pF	±5%	CL31C271JBCNNN#
27	1.00	50	C0G	330pF	±5%	CL31C331JBCNNN#
28	1.00	50	C0G	390pF	±5%	CL31C391JBCNNN#
29	1.00	50	C0G	560pF	±5%	CL31C561JBCNNN#
30	1.00	50	C0G	680pF	±5%	CL31C681JBCNNN#
31	1.00	50	C0G	820pF	±5%	CL31C821JBCNNN#
32	1.00	50	C0G	1nF	±1pF	CL31C102FBCNNN#
33	1.00	50	C0G	1.2nF	±5%	CL31C122JBCNNN#

Normal Capacitors_Standard

Size : 3.20 × 1.60mm (inch : 1206)

No.	Thickness Max. (mm)	Rated Voltage (Vdc)	TC code	Capacitance	Capacitance Tolerance	Part Number
34	1.00	50	C0G	1.5nF	±5%	CL31C152JBCNNN#
35	1.00	50	C0G	2.2nF	±5%	CL31C222JBCNNN#
36	1.40	50	C0G	3.3nF	±1pF	CL31C332FBFNNN#
37	1.40	50	C0G	3.3nF	±5%	CL31C332JBFNNN#
38	1.80	50	C0G	22nF	±5%	CL31C223JBHNNN#
39	1.80	50	C0G	47nF	±5%	CL31C473JBHNNN#
40	1.00	100	C0G	22pF	±5%	CL31C220JCCNNN#
41	1.00	100	C0G	100pF	±5%	CL31C101JCCNFN#
42	1.00	100	C0G	220pF	±5%	CL31C221JCCNNN#
43	1.00	100	C0G	1.5nF	±5%	CL31C152JCCNNN#
44	1.00	100	C0G	2.2nF	±5%	CL31C222JCCNNN#
45	1.40	200	C0G	1nF	±5%	CL31C102JDFNNN#
46	1.40	500	C0G	10pF	±5%	CL31C100JGFNNN#
47	1.40	500	C0G	100pF	±5%	CL31C101JGFNFN#
48	1.40	500	C0G	100pF	±5%	CL31C101JGFNNN#
49	1.40	500	C0G	100pF	±10%	CL31C101KGFNNN#
50	1.40	500	C0G	150pF	±5%	CL31C151JGFNNN#
51	1.40	500	C0G	220pF	±5%	CL31C221JGFNFN#
52	1.40	500	C0G	220pF	±5%	CL31C221JGFNNN#
53	1.40	500	C0G	270pF	±5%	CL31C271JGFNNN#
54	1.40	500	C0G	470pF	±5%	CL31C471JGFNNN#
55	1.80	500	C0G	680pF	±5%	CL31C681JGHNFN#
56	1.80	500	C0G	1nF	±5%	CL31C102JGHNFN#
57	1.40	630	C0G	10pF	±5%	CL31C100JHFNNN#
58	1.40	630	C0G	15pF	±5%	CL31C150JHFNNN#
59	1.40	630	C0G	22pF	±5%	CL31C220JHFNFN#
60	1.40	630	C0G	22pF	±5%	CL31C220JHFNNC#
61	1.40	630	C0G	22pF	±5%	CL31C220JHFNNN#
62	1.40	630	C0G	27pF	±5%	CL31C270JHFNNN#
63	1.40	630	C0G	33pF	±5%	CL31C330JHFNNN#
64	1.40	630	C0G	47pF	±5%	CL31C470JHFNFN#
65	1.40	630	C0G	47pF	±5%	CL31C470JHFNNN#
66	1.40	630	C0G	68pF	±5%	CL31C680JHFNNN#
67	1.40	630	C0G	100pF	±5%	CL31C101JHFNFN#
68	1.40	630	C0G	100pF	±5%	CL31C101JHFNNN#
69	1.40	630	C0G	150pF	±5%	CL31C151JHFNFN#
70	1.40	630	C0G	150pF	±5%	CL31C151JHFNNN#
71	1.40	630	C0G	220pF	±5%	CL31C221JHFNFN#
72	1.40	630	C0G	220pF	±5%	CL31C221JHFNNN#
73	1.40	630	C0G	330pF	±5%	CL31C331JHFNFN#
74	1.40	630	C0G	330pF	±5%	CL31C331JHFNNN#
75	1.40	630	C0G	390pF	±5%	CL31C391JHFNNN#
76	1.40	630	C0G	470pF	±5%	CL31C471JHFNFN#
77	1.40	630	C0G	470pF	±5%	CL31C471JHFNNN#
78	1.80	630	C0G	680pF	±5%	CL31C681JHHNFN#
79	1.80	630	C0G	680pF	±5%	CL31C681JHHNNN#
80	1.80	630	C0G	820pF	±5%	CL31C821JHHNNN#

Xin Yong Li

Normal Capacitors_Standard

Xin Yong Li

Size : 3.20 × 1.60mm (inch : 1206)

No.	Thickness Max. (mm)	Rated Voltage (Vdc)	TC code	Capacitance	Capacitance Tolerance	Part Number
81	1.30	630	C0G	1nF	±5%	CL31C102JHMLNN#
82	1.80	630	C0G	1nF	±5%	CL31C102JHHNFN#
83	1.80	630	C0G	1nF	±5%	CL31C102JHHNNC#
84	1.80	630	C0G	1nF	±5%	CL31C102JHHNNN#
85	1.80	630	C0G	1.2nF	±5%	CL31C122JHHNNN#
86	1.80	630	C0G	1.5nF	±5%	CL31C152JHHNFN#
87	1.80	630	C0G	2.2nF	±5%	CL31C222JHHNFN#
88	1.80	630	C0G	2.2nF	±5%	CL31C222JHHNNN#
89	1.80	630	C0G	3.3nF	±5%	CL31C332JHHNFN#
90	1.80	630	C0G	3.3nF	±5%	CL31C332JHHNNN#
91	1.40	1000	C0G	10pF	±5%	CL31C100JIFNNN#
92	1.40	1000	C0G	22pF	±5%	CL31C220JIFNFN#
93	1.40	1000	C0G	22pF	±5%	CL31C220JIFNNN#
94	1.40	1000	C0G	33pF	±5%	CL31C330JIFNFN#
95	1.40	1000	C0G	33pF	±5%	CL31C330JIFNNN#
96	1.40	1000	C0G	47pF	±5%	CL31C470JIFNFN#
97	1.40	1000	C0G	47pF	±5%	CL31C470JIFNNN#
98	1.40	1000	C0G	68pF	±5%	CL31C680JIFNFN#
99	1.40	1000	C0G	68pF	±5%	CL31C680JIFNNN#
100	1.40	1000	C0G	100pF	±5%	CL31C101JIFNFN#
101	1.40	1000	C0G	100pF	±5%	CL31C101JIFNNN#
102	1.40	1000	C0G	150pF	±5%	CL31C151JIFNNN#
103	1.80	1000	C0G	180pF	±5%	CL31C181JIHNNN#
104	1.80	1000	C0G	220pF	±5%	CL31C221JIHNFN#
105	1.80	1000	C0G	220pF	±5%	CL31C221JIHNNC#
106	1.80	1000	C0G	220pF	±5%	CL31C221JIHNNN#
107	1.80	1000	C0G	270pF	±5%	CL31C271JIHNNN#
108	1.80	1000	C0G	330pF	±5%	CL31C331JIHNNN#
109	1.80	1000	C0G	470pF	±5%	CL31C471JIHNFN#
110	1.80	1000	C0G	470pF	±5%	CL31C471JIHNNC#
111	1.80	1000	C0G	470pF	±5%	CL31C471JIHNNN#
112	1.80	2000	C0G	15pF	±5%	CL31C150JJHNNN#
113	1.80	2000	C0G	47pF	±5%	CL31C470JJHNNN#
114	1.80	2000	C0G	100pF	±5%	CL31C101JJHNNN#

Size : 3.20 × 2.50mm (inch : 1210)

No.	Thickness Max. (mm)	Rated Voltage (Vdc)	TC code	Capacitance	Capacitance Tolerance	Part Number
1	1.45	50	C0G	10nF	±1pF	CL32C103FBFNNN#
2	1.80	50	C0G	11nF	±5%	CL32C113JBHNNN#
3	1.45	2000	C0G	100pF	±5%	CL32C101JJFNNN#

Normal Capacitors_Standard

Xin Yong Li

Product Line Up (X5R)

Size : 0.60 × 0.30mm (inch : 0201)

No.	Thickness Max. (mm)	Rated Voltage (Vdc)	TC code	Capacitance	Capacitance Tolerance	Part Number
1	0.55	6.3	X5R	4.7uF	±20%	CL03A475MQ5C65#
2	0.39	4	X5R	4uF	±20%	CL03A405MR3CRN#
3	0.39	6.3	X5R	3uF	±20%	CL03A305MQ37RN#
4	0.39	6.3	X5R	3uF	±20%	CL03A305MQ3CRN#
5	0.39	10	X5R	2.2uF	±20%	CL03A225MP3CRN#
6	0.39	6.3	X5R	2.2uF	±20%	CL03A225MQ3CRN#
7	0.35	6.3	X5R	2.2uF	±20%	CL03A225MQ3ISN#
8	0.35	10	X5R	1uF	±10%	CL03A105KP3NSN#
9	0.35	6.3	X5R	1uF	±10%	CL03A105KQ3CSN#
10	0.35	10	X5R	1uF	±20%	CL03A105MP3NSN#
11	0.33	6.3	X5R	1uF	±20%	CL03A105MQ3CNN#
12	0.35	6.3	X5R	1uF	±20%	CL03A105MQ3CSN#
13	0.35	4	X5R	1uF	±20%	CL03A105MR3CSN#
14	0.33	10	X5R	470nF	±10%	CL03A474KP3NNN#
15	0.33	6.3	X5R	470nF	±10%	CL03A474KQ3NNN#
16	0.33	6.3	X5R	470nF	±20%	CL03A474MQ3NNN#
17	0.39	25	X5R	330nF	±10%	CL03A334KA3NRN#
18	0.39	25	X5R	220nF	±10%	CL03A224KA3NRN#
19	0.33	10	X5R	220nF	±10%	CL03A224KP3NNN#
20	0.33	6.3	X5R	220nF	±10%	CL03A224KQ3NNN#
21	0.33	6.3	X5R	220nF	±20%	CL03A224MQ3NNN#
22	0.33	25	X5R	100nF	±10%	CL03A104KA3NNN#
23	0.33	35	X5R	100nF	±10%	CL03A104KL3NNN#
24	0.33	16	X5R	100nF	±10%	CL03A104KO3NNN#
25	0.33	10	X5R	100nF	±10%	CL03A104KP3NNN#
26	0.33	6.3	X5R	100nF	±10%	CL03A104KQ3NNN#
27	0.33	25	X5R	100nF	±20%	CL03A104MA3NNN#
28	0.33	16	X5R	100nF	±20%	CL03A104MO3NNN#
29	0.33	10	X5R	100nF	±20%	CL03A104MP3NNN#
30	0.33	6.3	X5R	100nF	±20%	CL03A104MQ3NNN#
31	0.33	6.3	X5R	68nF	±10%	CL03A683KQ3NNN#
32	0.33	10	X5R	47nF	±10%	CL03A473KP3NNN#
33	0.33	6.3	X5R	47nF	±10%	CL03A473KQ3NNN#
34	0.33	25	X5R	22nF	±10%	CL03A223KA3NNN#
35	0.33	6.3	X5R	22nF	±10%	CL03A223KQ3NNN#
36	0.33	6.3	X5R	15nF	±10%	CL03A153KQ3NNN#
37	0.33	25	X5R	10nF	±10%	CL03A103KA3NNN#
38	0.33	10	X5R	10nF	±10%	CL03A103KP3NNN#
39	0.33	25	X5R	4.7nF	±10%	CL03A472KA3NNN#
40	0.33	10	X5R	4.7nF	±10%	CL03A472KP3NNN#

Normal Capacitors_Standard

Xin Yong Li

Size : 1.00 × 0.50mm (inch : 0402)

No.	Thickness Max. (mm)	Rated Voltage (Vdc)	TC code	Capacitance	Capacitance Tolerance	Part Number
1	0.70	6.3	X5R	22uF	±20%	CL05A226MQ5QUN#
2	0.70	4	X5R	22uF	±20%	CL05A226MR5QUN#
3	0.65	4	X5R	20uF	±20%	CL05A206MR5CRN#
4	0.80	10	X5R	15uF	±20%	CL05A156MP7N6J#
5	0.75	6.3	X5R	15uF	±20%	CL05A156MQ586J#
6	0.65	10	X5R	10uF	±20%	CL05A106MP5NRN#
7	0.80	10	X5R	10uF	±20%	CL05A106MP68UN#
8	0.80	10	X5R	10uF	±20%	CL05A106MP6NUN#
9	0.70	6.3	X5R	10uF	±20%	CL05A106MQ5N3U#
10	0.65	6.3	X5R	10uF	±20%	CL05A106MQ5NRN#
11	0.70	6.3	X5R	10uF	±20%	CL05A106MQ5NUN#
12	0.70	4	X5R	10uF	±20%	CL05A106MR5NUN#
13	0.65	6.3	X5R	4.7uF	±10%	CL05A475KQ5NRN#
14	0.55	16	X5R	4.7uF	±20%	CL05A475MO5LUN#
15	0.70	16	X5R	4.7uF	±20%	CL05A475MO5NUN#
16	0.60	4	X5R	4.7uF	±20%	CL05A475MR5NQN#
17	0.55	16	X5R	4.2uF	±10%	CL05A425KO5LUN#
18	0.70	25	X5R	2.2uF	±10%	CL05A225KA5NUN#
19	0.60	16	X5R	2.2uF	±10%	CL05A225KO5NQN#
20	0.55	10	X5R	2.2uF	±10%	CL05A225KP5NNN#
21	0.57	10	X5R	2.2uF	±10%	CL05A225KP5NSN#
22	0.55	6.3	X5R	2.2uF	±10%	CL05A225KQ5NNN#
23	0.57	6.3	X5R	2.2uF	±10%	CL05A225KQ5NSN#
24	0.55	25	X5R	2.2uF	±20%	CL05A225MA5JUN#
25	0.70	25	X5R	2.2uF	±20%	CL05A225MA5NUN#
26	0.55	10	X5R	2.2uF	±20%	CL05A225MP5NNN#
27	0.57	10	X5R	2.2uF	±20%	CL05A225MP5NSN#
28	0.33	6.3	X5R	2.2uF	±20%	CL05A225MQ3LRN#
29	0.57	6.3	X5R	2.2uF	±20%	CL05A225MQ5NSN#
30	0.55	4	X5R	2.2uF	±20%	CL05A225MR5NNN#
31	0.55	6.3	X5R	1uF	±5%	CL05A105JQ5NNN#
32	0.60	25	X5R	1uF	±10%	CL05A105KA5NFQ#
33	0.55	25	X5R	1uF	±10%	CL05A105KA5NNN#
34	0.60	25	X5R	1uF	±10%	CL05A105KA5NQN#
35	0.65	35	X5R	1uF	±10%	CL05A105KL5NRN#
36	0.55	16	X5R	1uF	±10%	CL05A105KO5NFN#
37	0.55	16	X5R	1uF	±10%	CL05A105KO5NNN#
38	0.55	10	X5R	1uF	±10%	CL05A105KP5NFN#
39	0.33	6.3	X5R	1uF	±10%	CL05A105KQ3LNN#
40	0.55	6.3	X5R	1uF	±10%	CL05A105KQ5NNN#
41	0.55	6.3	X5R	1uF	±20%	CL05A105MQ5NNN#
43	0.55	25	X5R	470nF	±10%	CL05A474KA5NNN#
44	0.55	16	X5R	470nF	±10%	CL05A474KO5NNN#
45	0.55	10	X5R	470nF	±10%	CL05A474KP5NNN#
46	0.55	6.3	X5R	470nF	±10%	CL05A474KQ5NNN#
48	0.55	25	X5R	330nF	±10%	CL05A334KA5NNN#
49	0.55	6.3	X5R	330nF	±10%	CL05A334KQ5NNN#

Normal Capacitors_Standard

Xin Yong Li

Size : 1.00 × 0.50mm (inch : 0402)

No.	Thickness Max. (mm)	Rated Voltage (Vdc)	TC code	Capacitance	Capacitance Tolerance	Part Number
50	0.55	6.3	X5R	330nF	±20%	CL05A334MQ5NNN#
52	0.55	25	X5R	220nF	±10%	CL05A224KA5NNN#
53	0.55	16	X5R	220nF	±10%	CL05A224KO5NNN#
54	0.55	10	X5R	220nF	±10%	CL05A224KP5NNN#
55	0.55	6.3	X5R	220nF	±10%	CL05A224KQ5NNN#
56	0.55	10	X5R	220nF	±20%	CL05A224MP5NNN#
59	0.55	10	X5R	150nF	±10%	CL05A154KP5NNN#
60	0.55	16	X5R	100nF	±5%	CL05A104JO5NNN#
61	0.55	25	X5R	100nF	±10%	CL05A104KA5NFN#
62	0.55	25	X5R	100nF	±10%	CL05A104KA5NNN#
63	0.55	16	X5R	100nF	±10%	CL05A104KO5NNN#
64	0.55	10	X5R	100nF	±10%	CL05A104KP5NNN#
65	0.55	6.3	X5R	100nF	±10%	CL05A104KQ5NNN#
66	0.55	16	X5R	100nF	±20%	CL05A104MO5NNN#
67	0.22	6.3	X5R	100nF	±20%	CL05A104MQ2HNN#

Size : 1.60 × 0.80mm (inch : 0603)

No.	Thickness Max. (mm)	Rated Voltage (Vdc)	TC code	Capacitance	Capacitance Tolerance	Part Number
1	0.80	6.3	X5R	47uF	±20%	CL10A476MQ7LZN#
2	1.00	6.3	X5R	47uF	±20 %	CL10A476MQ8QRN#
3	1.00	4	X5R	47uF	±20%	CL10A476MR8NRN#
4	1.10	4	X5R	47uF	±20%	CL10A476MR8NZN#
5	1.00	6.3	X5R	22uF	±10%	CL10A226KQ8NRN#
6	0.80	16	X5R	22uF	±20%	CL10A226MO79ZN#
7	0.80	16	X5R	22uF	±20%	CL10A226MO7FZN#
8	0.80	16	X5R	22uF	±20%	CL10A226MO7JZN#
9	0.80	10	X5R	22uF	±20%	CL10A226MP7LUN#
10	0.80	10	X5R	22uF	±20%	CL10A226MP7ZZB#
11	1.00	10	X5R	22uF	±20%	CL10A226MP8NRN#
12	1.05	10	X5R	22uF	±20%	CL10A226MP8NUN#
13	0.80	6.3	X5R	22uF	±20%	CL10A226MQ7LUN#
14	0.90	6.3	X5R	22uF	±20%	CL10A226MQ7NRN#
15	1.00	6.3	X5R	22uF	±20%	CL10A226MQ8NFR#
16	1.00	6.3	X5R	22uF	±20%	CL10A226MQ8NRN#
17	1.05	6.3	X5R	22uF	±20%	CL10A226MQ8NUN#
18	0.95	4	X5R	22uF	±20%	CL10A226MR8NQN#
19	0.95	16	X5R	10uF	±10%	CL10A106KO8NQN#
20	0.90	10	X5R	10uF	±10%	CL10A106KP8NFN#
21	0.90	10	X5R	10uF	±10%	CL10A106KP8NNN#
22	0.90	6.3	X5R	10uF	±10%	CL10A106KQ8NNN#
23	0.90	10	X5R	10uF	±20%	CL10A106MP8NFN#
24	0.95	10	X5R	10uF	±20%	CL10A106MP8NFS#
25	0.90	10	X5R	10uF	±20%	CL10A106MP8NNN#
26	0.95	25	X5R	4.7uF	±10%	CL10A475KA8NQN#
27	1.00	35	X5R	4.7uF	±10%	CL10A475KL8NRN#

Normal Capacitors_Standard

Xin Yong Li

Size : 1.60 × 0.80mm (inch : 0603)

No.	Thickness Max. (mm)	Rated Voltage (Vdc)	TC code	Capacitance	Capacitance Tolerance	Part Number
28	0.90	16	X5R	4.7uF	±10%	CL10A475KO8NFN#
29	0.90	16	X5R	4.7uF	±10%	CL10A475KO8NNN#
30	0.95	16	X5R	4.7uF	±10%	CL10A475KO8NQN#
31	0.50	10	X5R	4.7uF	±10%	CL10A475KP5LNN#
32	0.90	10	X5R	4.7uF	±10%	CL10A475KP8NFN#
33	0.90	10	X5R	4.7uF	±10%	CL10A475KP8NNN#
34	0.50	6.3	X5R	4.7uF	±10%	CL10A475KQ5LNN#
35	0.90	6.3	X5R	4.7uF	±10%	CL10A475KQ8NFN#
36	0.90	6.3	X5R	4.7uF	±10%	CL10A475KQ8NNN#
37	0.95	25	X5R	4.7uF	±20%	CL10A475MA8NQN#
38	0.90	16	X5R	4.7uF	±20%	CL10A475MO8NNN#
39	0.90	6.3	X5R	4.7uF	±20%	CL10A475MQ8NNN#
40	0.90	10	X5R	3.3uF	±10%	CL10A335KP8NFN#
41	0.90	10	X5R	3.3uF	±10%	CL10A335KP8NNN#
43	0.50	25	X5R	2.2uF	±10%	CL10A225KA5LNN#
44	0.90	25	X5R	2.2uF	±10%	CL10A225KA8NNN#
45	0.90	50	X5R	2.2uF	±10%	CL10A225KB8NNN#
46	0.90	35	X5R	2.2uF	±10%	CL10A225KL8NNN#
48	0.50	16	X5R	2.2uF	±10%	CL10A225KO5LNN#
49	0.90	16	X5R	2.2uF	±10%	CL10A225KO8N3N#
50	0.90	16	X5R	2.2uF	±10%	CL10A225KO8NFN#
52	0.90	16	X5R	2.2uF	±10%	CL10A225KO8NNN#
53	0.50	10	X5R	2.2uF	±10%	CL10A225KP5LNN#
54	0.90	10	X5R	2.2uF	±10%	CL10A225KP8NNN#
55	0.50	6.3	X5R	2.2uF	±10%	CL10A225KQ5LNN#
56	0.90	6.3	X5R	2.2uF	±10%	CL10A225KQ8N3N#
59	0.90	6.3	X5R	2.2uF	±10%	CL10A225KQ8NNN#
60	0.90	10	X5R	2.2uF	±20%	CL10A225MP8NNN#
61	0.90	25	X5R	1uF	±10%	CL10A105KA8NFN#
62	0.90	25	X5R	1uF	±10%	CL10A105KA8NNN#
63	0.90	50	X5R	1uF	±10%	CL10A105KB8NNN#
64	0.90	35	X5R	1uF	±10%	CL10A105KL8NNN#
65	0.90	16	X5R	1uF	±10%	CL10A105KO8NNN#
66	0.90	10	X5R	1uF	±10%	CL10A105KP8NNN#
67	0.90	6.3	X5R	1uF	±10%	CL10A105KQ8NNN#
68	0.90	50	X5R	1uF	±20%	CL10A105MB8NNN#
69	0.90	16	X5R	1uF	±20%	CL10A105MO8NNN#
70	0.90	25	X5R	470nF	±10%	CL10A474KA8NNN#
71	0.90	50	X5R	470nF	±10%	CL10A474KB8NNN#
72	0.90	16	X5R	470nF	±10%	CL10A474KO8NNN#
73	0.90	50	X5R	220nF	±10%	CL10A224KB8NNN#
74	0.90	10	X5R	220nF	±10%	CL10A224KP8NNN#
75	0.90	25	X5R	100nF	±10%	CL10A104KA8NNN#

Normal Capacitors_Standard

Xin Yong Li

Size : 2.00 × 1.25mm (inch : 0805)

No.	Thickness Max. (mm)	Rated Voltage (Vdc)	TC code	Capacitance	Capacitance Tolerance	Part Number
1	0.80	6.3	X5R	47uF	±20%	CL21A476MQ7LRN#
2	0.90	6.3	X5R	47uF	±20%	CL21A476MQ8LRN#
3	1.00	6.3	X5R	47uF	±20%	CL21A476MQ9LRN#
4	0.95	6.3	X5R	47uF	±20%	CL21A476MQCLRN#
5	1.45	6.3	X5R	47uF	±20%	CL21A476MQYN3N#
6	1.45	6.3	X5R	47uF	±20%	CL21A476MQYNNN#
7	1.45	4	X5R	47uF	±20%	CL21A476MRYNNN#
8	1.20	6.3	X5R	33uF	±20%	CL21A336MQELRN#
9	1.40	16	X5R	22uF	±10%	CL21A226KOQNNN#
10	0.95	10	X5R	22uF	±10%	CL21A226KPCLRN#
11	0.95	6.3	X5R	22uF	±10%	CL21A226KQCLRN#
12	1.40	6.3	X5R	22uF	±10%	CL21A226KQQNFN#
13	1.40	6.3	X5R	22uF	±10%	CL21A226KQQNNN#
14	1.45	25	X5R	22uF	±20%	CL21A226MAYNNN#
15	0.95	16	X5R	22uF	±20%	CL21A226MOCLRN#
16	1.40	16	X5R	22uF	±20%	CL21A226MOQNNN#
17	0.95	10	X5R	22uF	±20%	CL21A226MPCLRN#
18	1.40	10	X5R	22uF	±20%	CL21A226MPQNNN#
19	0.95	6.3	X5R	22uF	±20%	CL21A226MQCLRN#
20	1.40	6.3	X5R	22uF	±20%	CL21A226MQQN3N#
21	1.40	6.3	X5R	22uF	±20%	CL21A226MQQNNN#
22	0.95	25	X5R	10uF	±10%	CL21A106KACLRN#
23	1.35	25	X5R	10uF	±10%	CL21A106KAFN3N#
24	1.45	25	X5R	10uF	±10%	CL21A106KAYN3N#
25	1.45	25	X5R	10uF	±10%	CL21A106KAYNFN#
26	1.45	25	X5R	10uF	±10%	CL21A106KAYNNN#
27	1.45	50	X5R	10uF	±10%	CL21A106KBYQNN#
28	0.95	16	X5R	10uF	±10%	CL21A106KOCLRN#
29	1.35	16	X5R	10uF	±10%	CL21A106KOFNNN#
30	1.40	16	X5R	10uF	±10%	CL21A106KOQNFN#
31	1.40	16	X5R	10uF	±10%	CL21A106KOQNNN#
32	0.95	10	X5R	10uF	±10%	CL21A106KPCLQN#
33	0.95	10	X5R	10uF	±10%	CL21A106KPCLRN#
34	1.35	10	X5R	10uF	±10%	CL21A106KPFNNN#
35	0.95	6.3	X5R	10uF	±10%	CL21A106KQCLNN#
36	0.95	6.3	X5R	10uF	±10%	CL21A106KQCLRN#
37	1.35	6.3	X5R	10uF	±10%	CL21A106KQFNFN#
38	1.35	6.3	X5R	10uF	±10%	CL21A106KQFNNN#
39	1.45	25	X5R	10uF	±20%	CL21A106MAYNNN#
40	1.35	16	X5R	10uF	±20%	CL21A106MOFNNN#
41	1.35	10	X5R	10uF	±20%	CL21A106MPFNNN#
43	0.95	6.3	X5R	10uF	±20%	CL21A106MQCLNN#
44	1.35	6.3	X5R	10uF	±20%	CL21A106MQFNNN#
45	1.40	6.3	X5R	10uF	±20%	CL21A106MQQNNN#
46	0.95	25	X5R	4.7uF	±10%	CL21A475KACLRN#
48	1.40	25	X5R	4.7uF	±10%	CL21A475KAQN3N#
49	1.40	25	X5R	4.7uF	±10%	CL21A475KAQNFN#

Normal Capacitors_Standard

Xin Yong Li

Size : 2.00 × 1.25mm (inch : 0805)

No.	Thickness Max. (mm)	Rated Voltage (Vdc)	TC code	Capacitance	Capacitance Tolerance	Part Number
50	1.40	25	X5R	4.7uF	±10%	CL21A475KAQNNN#
52	1.40	50	X5R	4.7uF	±10%	CL21A475KBQNNN#
53	0.95	35	X5R	4.7uF	±10%	CL21A475KLCLQN#
54	0.95	16	X5R	4.7uF	±10%	CL21A475KOCLRN#
55	1.35	16	X5R	4.7uF	±10%	CL21A475KOFNNN#
56	0.95	10	X5R	4.7uF	±10%	CL21A475KPCLNN#
59	1.35	10	X5R	4.7uF	±10%	CL21A475KPFNNN#
60	0.95	6.3	X5R	4.7uF	±10%	CL21A475KQCLNN#
61	1.35	6.3	X5R	4.7uF	±10%	CL21A475KQFNNN#
62	1.35	25	X5R	4.7uF	±20%	CL21A475MAFNNN#
63	1.40	25	X5R	4.7uF	±20%	CL21A475MAQNNN#
64	1.35	10	X5R	4.7uF	±20%	CL21A475MPFNNN#
65	1.35	6.3	X5R	4.7uF	±20%	CL21A475MQFNNN#
66	1.35	10	X5R	3.3uF	±10%	CL21A335KPFNNN#
67	0.95	25	X5R	2.2uF	±10%	CL21A225KACLNN#
68	1.35	25	X5R	2.2uF	±10%	CL21A225KAFNFN#
69	1.35	25	X5R	2.2uF	±10%	CL21A225KAFNNN#
70	1.00	50	X5R	2.2uF	±10%	CL21A225KB9LNN#
71	1.35	50	X5R	2.2uF	±10%	CL21A225KBFNNN#
72	1.40	50	X5R	2.2uF	±10%	CL21A225KBQNNN#
73	0.95	16	X5R	2.2uF	±10%	CL21A225KOCLNN#
74	1.35	16	X5R	2.2uF	±10%	CL21A225KOFNNN#
75	0.95	10	X5R	2.2uF	±10%	CL21A225KPCLNN#
76	1.35	10	X5R	2.2uF	±10%	CL21A225KPFNNN#
77	0.95	25	X5R	1uF	±10%	CL21A105KACLNN#
78	0.95	50	X5R	1uF	±10%	CL21A105KBCLNN#
79	0.95	16	X5R	1uF	±10%	CL21A105KOCLNN#
80	1.35	10	X5R	1uF	±10%	CL21A105KPFNNN#

Size : 3.20 × 1.60mm (inch : 1206)

No.	Thickness Max. (mm)	Rated Voltage (Vdc)	TC code	Capacitance	Capacitance Tolerance	Part Number
1	1.80	6.3	X5R	47uF	±20%	CL31A107MQHNNN#
2	1.80	6.3	X5R	47uF	±20%	CL31A476KQHNNN#
3	1.80	10	X5R	47uF	±20%	CL31A476MPHNFN#
4	1.80	10	X5R	47uF	±20%	CL31A476MPHNNN#
5	1.80	6.3	X5R	47uF	±20%	CL31A476MQHNNN#
6	1.80	25	X5R	47uF	±20%	CL31A226KAHNNN#
7	0.95	16	X5R	47uF	±20%	CL31A226KOCLFN#
8	0.95	16	X5R	33uF	±20%	CL31A226KOCLNN#
9	1.80	16	X5R	22uF	±10%	CL31A226KOHNFN#
10	1.80	16	X5R	22uF	±10%	CL31A226KOHNNN#
11	1.80	10	X5R	22uF	±10%	CL31A226KPHNNN#
12	1.80	6.3	X5R	22uF	±10%	CL31A226KQHNNN#
13	1.80	25	X5R	22uF	±10%	CL31A226MAHNNN#
14	0.95	16	X5R	22uF	±20%	CL31A226MOCLFN#

Normal Capacitors_Standard

Xin Yong Li

Size : 3.20 × 1.60mm (inch : 1206)

No.	Thickness Max. (mm)	Rated Voltage (Vdc)	TC code	Capacitance	Capacitance Tolerance	Part Number
15	0.95	16	X5R	22uF	±20%	CL31A226MOCLNN#
16	1.80	16	X5R	22uF	±20%	CL31A226MOHNNN#
17	1.80	10	X5R	22uF	±20%	CL31A226MPHNNN#
18	1.80	6.3	X5R	22uF	±20%	CL31A226MQHNNN#
19	0.95	25	X5R	22uF	±20%	CL31A106KACLNN#
20	1.80	25	X5R	22uF	±20%	CL31A106KAHNFN#
21	1.80	25	X5R	22uF	±20%	CL31A106KAHNNN#
22	1.80	50	X5R	10uF	±10%	CL31A106KBHNNN#
23	0.95	16	X5R	10uF	±10%	CL31A106KOCLNN#
24	1.80	16	X5R	10uF	±10%	CL31A106KOHNNN#
25	1.80	10	X5R	10uF	±10%	CL31A106KPHNNN#
26	1.25	10	X5R	10uF	±10%	CL31A106KPPLNN#
27	1.80	6.3	X5R	10uF	±10%	CL31A106KQHNNN#
28	1.80	25	X5R	10uF	±10%	CL31A106MAHNNN#
29	1.80	50	X5R	10uF	±10%	CL31A106MBHNNN#
30	1.80	16	X5R	10uF	±10%	CL31A106MOHNNN#
31	1.80	6.3	X5R	10uF	±10%	CL31A106MQHNNN#
32	0.95	25	X5R	10uF	±10%	CL31A475KACLNN#
33	1.80	25	X5R	10uF	±10%	CL31A475KAHNNN#
34	1.00	50	X5R	10uF	±10%	CL31A475KB9LNN#
35	1.80	50	X5R	10uF	±10%	CL31A475KBHNNN#
36	1.00	35	X5R	10uF	±10%	CL31A475KL9LNN#
37	0.95	16	X5R	10uF	±10%	CL31A475KOCLNN#
38	1.80	16	X5R	10uF	±10%	CL31A475KOHNNN#
39	1.80	16	X5R	10uF	±20%	CL31A475MOHNNN#
40	1.80	25	X5R	10uF	±20%	CL31A335KAHNNN#
41	0.95	16	X5R	10uF	±20%	CL31A335KOCLNN#
43	1.80	16	X5R	10uF	±20%	CL31A335KOHNNN#
44	1.00	50	X5R	10uF	±20%	CL31A225KB9LNN#
45	1.00	100	X5R	10uF	±20%	CL31A225KC9LNN#
46	1.80	16	X5R	4.7uF	±10%	CL31A225KOHNNN#
48	1.00	50	X5R	4.7uF	±10%	CL31A105KB9LNN#

Size : 3.20 × 2.50mm (inch : 1210)

No.	Thickness Max. (mm)	Rated Voltage (Vdc)	TC code	Capacitance	Capacitance Tolerance	Part Number
1	2.80	6.3	X5R	220uF	±20%	CL32A227MQVNNN#
2	2.80	6.3	X5R	150uF	±20%	CL32A157MQVNNN#
3	2.80	10	X5R	100uF	±20%	CL32A107MPVNNN#
4	2.80	6.3	X5R	100uF	±20%	CL32A107MQVNNN#
5	2.70	16	X5R	47uF	±10%	CL32A476KOJNNN#
6	2.70	10	X5R	47uF	±10%	CL32A476KPJNNN#
7	2.70	6.3	X5R	47uF	±10%	CL32A476KQJNNN#
8	2.70	16	X5R	47uF	±20%	CL32A476MOJNNN#
9	2.70	6.3	X5R	47uF	±20%	CL32A476MQJNNN#
10	2.70	25	X5R	22uF	±10%	CL32A226KAJNFN#

Normal Capacitors_Standard

Xin Yong Li

Size : 3.20 × 2.50mm (inch : 1210)

No.	Thickness Max. (mm)	Rated Voltage (Vdc)	TC code	Capacitance	Capacitance Tolerance	Part Number
11	2.70	25	X5R	22uF	±10%	CL32A226KAJNNN#
12	2.70	16	X5R	22uF	±10%	CL32A226KOJNFN#
13	2.70	16	X5R	22uF	±10%	CL32A226KOJNNN#
14	2.70	10	X5R	22uF	±10%	CL32A226KPJNNN#
15	2.70	6.3	X5R	22uF	±10%	CL32A226KQJNNN#
16	2.70	25	X5R	22uF	±20%	CL32A226MAJNNN#
17	0.95	16	X5R	22uF	±20%	CL32A226MOCLNN#
18	2.70	16	X5R	22uF	±20%	CL32A226MOJNNN#
19	1.70	16	X5R	22uF	±20%	CL32A226MOTLNN#
20	2.70	10	X5R	22uF	±20%	CL32A226MPJNNN#
21	2.70	6.3	X5R	22uF	±20%	CL32A226MQJNNN#
22	2.70	25	X5R	10uF	±10%	CL32A106KAJNNN#
23	1.70	25	X5R	10uF	±10%	CL32A106KATLNN#
24	2.00	25	X5R	10uF	±10%	CL32A106KAULNN#
25	2.70	50	X5R	10uF	±10%	CL32A106KBJNNN#
26	2.00	35	X5R	10uF	±10%	CL32A106KLULNN#
27	0.95	16	X5R	10uF	±10%	CL32A106KOCLNN#
28	2.70	16	X5R	10uF	±10%	CL32A106KOJNNN#
29	2.20	10	X5R	10uF	±10%	CL32A106KPINNN#
30	2.70	50	X5R	10uF	±20%	CL32A106MBJNNN#
31	2.70	16	X5R	10uF	±20%	CL32A106MOJNNN#
32	2.00	35	X5R	4.7uF	±10%	CL32A475KLULNN#

Product Line Up (X6S)

Size : 0.60 × 0.30mm (inch : 0201)

No.	Thickness Max. (mm)	Rated Voltage (Vdc)	TC code	Capacitance	Capacitance Tolerance	Part Number
1	0.39	4	X6S	1uF	±20%	CL03X105MR3NRN#
2	0.33	6.3	X6S	220nF	±10%	CL03X224KQ3NNN#
3	0.33	6.3	X6S	100nF	±10%	CL03X104KQ3NNN#

Size : 1.00 × 0.50mm (inch : 0402)

No.	Thickness Max. (mm)	Rated Voltage (Vdc)	TC code	Capacitance	Capacitance Tolerance	Part Number
1	0.70	4	X6S	10uF	±20%	CL05X106MR5NUN#
2	0.70	4	X6S	4.7uF	±20%	CL05X475MR5NUN#
3	0.57	6.3	X6S	2.2uF	±20%	CL05X225MQ5NSN#
4	0.57	2.5	X6S	2.2uF	±20%	CL05X225MS5NSN#
5	0.60	25	X6S	1uF	±10%	CL05X105KA5NQN#
6	0.55	10	X6S	1uF	±10%	CL05X105KP5NNN#
7	0.55	6.3	X6S	1uF	±10%	CL05X105KQ5NFN#
8	0.55	6.3	X6S	1uF	±10%	CL05X105KQ5NNN#
9	0.33	10	X6S	1uF	±20%	CL05X105MP3JQN#

Normal Capacitors_Standard

Xin Yong Li

Size : 1.60 × 0.80mm (inch : 0603)

No.	Thickness Max. (mm)	Rated Voltage (Vdc)	TC code	Capacitance	Capacitance Tolerance	Part Number
1	1.05	4	X6S	22uF	±20%	CL10X226MR8NUN#
2	0.90	4	X6S	10uF	±10%	CL10X106KR8NNN#
3	1.00	16	X6S	10uF	±20%	CL10X106MO8NRN#
4	1.00	10	X6S	10uF	±20%	CL10X106MP8NFR#
5	1.00	10	X6S	10uF	±20%	CL10X106MP8NRN#
6	0.90	6.3	X6S	10uF	±20%	CL10X106MQ8NNN#
7	0.90	4	X6S	10uF	±20%	CL10X106MR8NNN#
8	0.95	25	X6S	4.7uF	±10%	CL10X475KA8NQN#
9	0.95	16	X6S	4.7uF	±10%	CL10X475KO8NFQ#
10	0.95	16	X6S	4.7uF	±10%	CL10X475KO8NQN#
11	1.00	16	X6S	4.7uF	±10%	CL10X475KO8NRN#
12	0.90	6.3	X6S	4.7uF	±10%	CL10X475KQ8NNN#
13	0.90	6.3	X6S	4.7uF	±20%	CL10X475MQ8NNN#
14	0.90	10	X6S	2.2uF	±10%	CL10X225KP8NNN#

Size : 2.00 × 1.25mm (inch : 0805)

No.	Thickness Max. (mm)	Rated Voltage (Vdc)	TC code	Capacitance	Capacitance Tolerance	Part Number
1	1.45	4	X6S	47uF	±20%	CL21X476MRYNNN#
2	1.40	6.3	X6S	22uF	±20%	CL21X226MQQNFN#
3	1.40	6.3	X6S	22uF	±20%	CL21X226MQQNNN#
4	1.40	4	X6S	22uF	±20%	CL21X226MRQNFN#
5	1.40	4	X6S	22uF	±20%	CL21X226MRQNNN#
6	0.95	2.5	X6S	22uF	±20%	CL21X226MSCLRN#
7	1.45	25	X6S	10uF	±10%	CL21X106KAYNNN#
8	1.40	16	X6S	10uF	±10%	CL21X106KOQNNN#
9	0.95	10	X6S	10uF	±10%	CL21X106KPCLRN#
10	1.45	10	X6S	10uF	±10%	CL21X106KPYNNN#
11	1.40	6.3	X6S	10uF	±10%	CL21X106KQQNNN#
12	1.40	16	X6S	10uF	±20%	CL21X106MOQNNN#
13	1.35	4	X6S	10uF	±20%	CL21X106MRFNNN#
14	1.40	25	X6S	4.7uF	±10%	CL21X475KAQNNN#
15	1.35	16	X6S	2.2uF	±10%	CL21X225KOFNNN#

Size : 3.20 × 1.60mm (inch : 1206)

No.	Thickness Max. (mm)	Rated Voltage (Vdc)	TC code	Capacitance	Capacitance Tolerance	Part Number
1	1.80	6.3	X6S	47uF	±10%	CL31X476KQHNNN#
2	1.80	6.3	X6S	47uF	±20%	CL31X476MQHNFN#
3	1.80	6.3	X6S	47uF	±20%	CL31X476MQHNNN#
4	1.80	4	X6S	47uF	±20%	CL31X476MRHNNN#
5	1.80	25	X6S	22uF	±10%	CL31X226KAHN3N#
6	1.80	25	X6S	22uF	±10%	CL31X226KAHNF3#
7	1.80	16	X6S	22uF	±10%	CL31X226KOHN3N#
8	1.80	16	X6S	22uF	±10%	CL31X226KOHNNN#
9	1.80	10	X6S	22uF	±10%	CL31X226KPHN3N#
10	1.80	6.3	X6S	22uF	±10%	CL31X226KQHNNN#
11	1.80	25	X6S	10uF	±10%	CL31X106KAHNNN#

Normal Capacitors_Standard

Xin Yong Li

Size : 3.20 × 2.50mm (inch : 1210)

No.	Thickness Max. (mm)	Rated Voltage (Vdc)	TC code	Capacitance	Capacitance Tolerance	Part Number
1	2.70	6.3	X6S	100uF	±20%	CL32X107MQVNNN#
2	2.70	10	X6S	47uF	±10%	CL32X476KPJNNN#
3	2.70	16	X6S	10uF	±10%	CL32X106KOJNNN#

Product Line Up (Y5V)

Size : 1.00 × 0.50mm (inch : 0402)

No.	Thickness Max. (mm)	Rated Voltage (Vdc)	TC code	Capacitance	Capacitance Tolerance	Part Number
1	0.55	6.3	Y5V	1uF	-20/+80%	CL05F105ZQ5NNN#
2	0.55	10	Y5V	470nF	-20/+80%	CL05F474ZP5NNN#
3	0.55	10	Y5V	330nF	-20/+80%	CL05F334ZP5NNN#
4	0.55	16	Y5V	220nF	-20/+80%	CL05F224ZO5NNN#
5	0.55	10	Y5V	220nF	-20/+80%	CL05F224ZP5NNN#
6	0.55	16	Y5V	100nF	-20/+80%	CL05F104ZO5NNN#
7	0.55	16	Y5V	47nF	-20/+80%	CL05F473ZO5NNN#
8	0.55	25	Y5V	33nF	-20/+80%	CL05F333ZA5NNN#
9	0.55	16	Y5V	33nF	-20/+80%	CL05F333ZO5NNN#
10	0.55	25	Y5V	22nF	-20/+80%	CL05F223ZA5NNN#
11	0.55	16	Y5V	22nF	-20/+80%	CL05F223ZO5NNN#
12	0.55	50	Y5V	15nF	-20/+80%	CL05F153ZB5NNN#

Size : 1.60 × 0.80mm (inch : 0603)

No.	Thickness Max. (mm)	Rated Voltage (Vdc)	TC code	Capacitance	Capacitance Tolerance	Part Number
1	0.90	10	Y5V	2.2uF	-20/+80%	CL10F225ZP8NNN#
2	0.90	6.3	Y5V	2.2uF	-20/+80%	CL10F225ZQ8NNN#
3	0.90	25	Y5V	470nF	-20/+80%	CL10F474ZA8NNN#
4	0.90	16	Y5V	470nF	-20/+80%	CL10F474ZO8NNN#
5	0.90	25	Y5V	330nF	-20/+80%	CL10F334ZA8NNN#
6	0.90	16	Y5V	330nF	-20/+80%	CL10F334ZO8NNN#
7	0.90	25	Y5V	150nF	-20/+80%	CL10F154ZA8NNN#
8	0.90	25	Y5V	100nF	-20/+80%	CL10F104ZA8NFN#
9	0.90	25	Y5V	100nF	-20/+80%	CL10F104ZA8NNN#
10	0.90	50	Y5V	100nF	-20/+80%	CL10F104ZB8NNN#
11	0.90	16	Y5V	100nF	-20/+80%	CL10F104ZO8NNN#
12	0.90	50	Y5V	68nF	-20/+80%	CL10F683ZB8NNN#
13	0.90	50	Y5V	39nF	-20/+80%	CL10F393ZB8NNN#
14	0.90	50	Y5V	33nF	-20/+80%	CL10F333ZB8NNN#
15	0.90	50	Y5V	22nF	-20/+80%	CL10F223ZB8NNN#
16	0.90	50	Y5V	10nF	-20/+80%	CL10F103ZB8NNN#

Normal Capacitors_Standard

Xin Yong Li

Size : 2.00 × 1.25mm (inch : 0805)

No.	Thickness Max. (mm)	Rated Voltage (Vdc)	TC code	Capacitance	Capacitance Tolerance	Part Number
1	1.35	10	Y5V	10uF	-20/+80%	CL21F106ZPFNNN#
2	1.35	6.3	Y5V	10uF	-20/+80%	CL21F106ZQFNNN#
3	1.35	10	Y5V	4.7uF	-20/+80%	CL21F475ZPFNNN#
4	1.35	10	Y5V	3.3uF	-20/+80%	CL21F335ZPFNNN#
5	1.35	16	Y5V	2.2uF	-20/+80%	CL21F225ZOFNNN#
6	1.35	10	Y5V	2.2uF	-20/+80%	CL21F225ZPFNNN#
7	1.35	25	Y5V	1uF	-20/+80%	CL21F105ZAFNNN#
8	1.35	50	Y5V	1uF	-20/+80%	CL21F105ZBFNNN#
9	0.75	16	Y5V	680nF	-20/+80%	CL21F684ZOANNN#
10	0.95	25	Y5V	470nF	-20/+80%	CL21F474ZACNNN#
11	0.95	25	Y5V	330nF	-20/+80%	CL21F334ZACNNN#
12	1.35	50	Y5V	330nF	-20/+80%	CL21F334ZBFNNN#
13	0.75	25	Y5V	220nF	-20/+80%	CL21F224ZAANNN#
14	0.95	50	Y5V	220nF	-20/+80%	CL21F224ZBCNNN#
15	0.95	50	Y5V	150nF	-20/+80%	CL21F154ZBCNNN#
16	0.95	50	Y5V	100nF	±20%	CL21F104MBCNNN#
17	0.75	25	Y5V	100nF	-20/+80%	CL21F104ZAANNN#
18	0.75	50	Y5V	100nF	-20/+80%	CL21F104ZBANNN#
19	0.75	50	Y5V	47nF	-20/+80%	CL21F473ZBANNN#
20	0.75	50	Y5V	22nF	-20/+80%	CL21F223ZBANNN#
21	0.75	50	Y5V	10nF	-20/+80%	CL21F103ZBANNN#

Size : 3.20 × 1.60mm (inch : 1206)

No.	Thickness Max. (mm)	Rated Voltage (Vdc)	TC code	Capacitance	Capacitance Tolerance	Part Number
1	1.40	10	Y5V	10uF	-20/+80%	CL31F106ZPFNNN#
2	1.80	10	Y5V	10uF	-20/+80%	CL31F106ZPHNNN#
3	1.40	16	Y5V	4.7uF	-20/+80%	CL31F475ZOFNNN#
4	1.40	16	Y5V	3.3uF	-20/+80%	CL31F335ZOFNNN#
5	1.40	25	Y5V	2.2uF	-20/+80%	CL31F225ZAFNNN#
6	1.00	16	Y5V	2.2uF	-20/+80%	CL31F225ZOCNNN#
7	1.00	25	Y5V	1uF	-20/+80%	CL31F105ZACNNN#
8	1.40	50	Y5V	1uF	-20/+80%	CL31F105ZBFNNN#
9	1.00	16	Y5V	1uF	-20/+80%	CL31F105ZOCNNN#
10	1.00	50	Y5V	470nF	-20/+80%	CL31F474ZBCNNN#
11	1.00	50	Y5V	330nF	-20/+80%	CL31F334ZBCNNN#
12	1.00	50	Y5V	220nF	-20/+80%	CL31F224ZBCNNN#
13	1.00	50	Y5V	100nF	-20/+80%	CL31F104ZBCNNN#

Size : 3.20 × 2.50mm (inch : 1210)

No.	Thickness Max. (mm)	Rated Voltage (Vdc)	TC code	Capacitance	Capacitance Tolerance	Part Number
1	1.80	25	Y5V	10uF	-20/+80%	CL32F106ZAHNNN#
2	1.50	25	Y5V	10uF	-20/+80%	CL32F106ZASLNN#
3	1.60	35	Y5V	10uF	-20/+80%	CL32F106ZLGNNN#
4	1.80	35	Y5V	10uF	-20/+80%	CL32F106ZLHNNN#
5	1.80	16	Y5V	10uF	-20/+80%	CL32F106ZOHNNN#
6	1.45	50	Y5V	1uF	-20/+80%	CL32F105ZBFNNN#

Normal Capacitors_Standard

Xin Yong Li

Product Line Up (X7R)

Size : 0.20 × 0.10mm (inch : 01005)

No.	Thickness Max. (mm)	Rated Voltage (Vdc)	TC code	Capacitance	Capacitance Tolerance	Part Number
1	0.22	10	X7R	100pF	±10%	CL02B101KP2NNN#
2	0.22	10	X7R	120pF	±10%	CL02B121KP2NNN#
3	0.22	10	X7R	220pF	±10%	CL02B221KP2NNN#
4	0.22	10	X7R	330pF	±10%	CL02B331KP2NNN#
5	0.22	10	X7R	470pF	±10%	CL02B471KP2NNN#
6	0.22	10	X7R	1nF	±10%	CL02B102KP2NNN#
7	0.22	16	X7R	330pF	±10%	CL02B331KO2NNN#

Size : 0.60 × 0.30mm (inch : 0201)

No.	Thickness Max. (mm)	Rated Voltage (Vdc)	TC code	Capacitance	Capacitance Tolerance	Part Number
1	0.33	6.3	X7R	4.7nF	±10%	CL03B472KQ3NNN#
2	0.33	6.3	X7R	10nF	±10%	CL03B103KQ3NNN#
3	0.33	10	X7R	1.5nF	±10%	CL03B152KP3NNN#
4	0.33	10	X7R	3.3nF	±10%	CL03B332KP3NNN#
5	0.33	10	X7R	6.8nF	±10%	CL03B682KP3NNN#
6	0.33	10	X7R	10nF	±10%	CL03B103KP3NNN#
7	0.33	16	X7R	150pF	±10%	CL03B151KO3NNN#
8	0.33	16	X7R	220pF	±10%	CL03B221KO3NNN#
9	0.33	16	X7R	270pF	±10%	CL03B271KO3NNN#
10	0.33	16	X7R	470pF	±10%	CL03B471KO3NNN#
11	0.33	16	X7R	560pF	±10%	CL03B561KO3NNN#
12	0.33	16	X7R	820pF	±10%	CL03B821KO3NNN#
13	0.33	16	X7R	1nF	±10%	CL03B102KO3NNN#
14	0.33	25	X7R	150pF	±10%	CL03B151KA3NNN#
15	0.33	25	X7R	220pF	±10%	CL03B221KA3NNN#
16	0.33	25	X7R	330pF	±10%	CL03B331KA3NNN#
17	0.33	25	X7R	470pF	±10%	CL03B471KA3NNN#
18	0.33	25	X7R	680pF	±10%	CL03B681KA3NNN#
19	0.33	25	X7R	1nF	±5%	CL03B102JA3NNN#
20	0.33	25	X7R	1nF	±10%	CL03B102KA3NNN#

Size : 1.00 × 0.50mm (inch : 0402)

No.	Thickness Max. (mm)	Rated Voltage (Vdc)	TC code	Capacitance	Capacitance Tolerance	Part Number
1	0.55	6.3	X7R	100nF	±10%	CL05B104KQ5NNN#
2	0.55	6.3	X7R	470nF	±10%	CL05B474KQ5NNN#
3	0.55	10	X7R	22nF	±10%	CL05B223KP5NNN#
4	0.55	10	X7R	27nF	±10%	CL05B273KP5NNN#
5	0.55	10	X7R	47nF	±10%	CL05B473KP5NNN#
6	0.55	10	X7R	68nF	±10%	CL05B683KP5NNN#
7	0.55	10	X7R	82nF	±10%	CL05B823KP5NNN#
8	0.55	10	X7R	100nF	±10%	CL05B104KP5NFN#

Normal Capacitors_Standard

Xin Yong Li

Size : 1.00 × 0.50mm (inch : 0402)

No.	Thickness Max. (mm)	Rated Voltage (Vdc)	TC code	Capacitance	Capacitance Tolerance	Part Number
9	0.55	10	X7R	100nF	±10%	CL05B104KP5NNN#
10	0.55	10	X7R	100nF	±20%	CL05B104MP5NNN#
11	0.55	10	X7R	220nF	±10%	CL05B224KP5NNN#
12	0.55	10	X7R	470nF	±10%	CL05B474KP5NNN#
13	0.55	16	X7R	820pF	±10%	CL05B821KO5NNN#
14	0.55	16	X7R	8.2nF	±10%	CL05B822KO5NNN#
15	0.55	16	X7R	10nF	±5%	CL05B103JO5NNN#
16	0.55	16	X7R	10nF	±10%	CL05B103KO5NCN#
17	0.55	16	X7R	10nF	±10%	CL05B103KO5NFN#
18	0.55	16	X7R	10nF	±10%	CL05B103KO5NNN#
19	0.55	16	X7R	22nF	±5%	CL05B223JO5NNN#
20	0.55	16	X7R	22nF	±10%	CL05B223KO5NFN#
21	0.55	16	X7R	22nF	±10%	CL05B223KO5NNN#
22	0.55	16	X7R	27nF	±10%	CL05B273KO5NNN#
23	0.55	16	X7R	33nF	±5%	CL05B333JO5NNN#
24	0.55	16	X7R	33nF	±10%	CL05B333KO5NFN#
25	0.55	16	X7R	33nF	±10%	CL05B333KO5NNN#
26	0.55	16	X7R	47nF	±5%	CL05B473JO5NNN#
27	0.55	16	X7R	47nF	±10%	CL05B473KO5NFN#
28	0.55	16	X7R	47nF	±10%	CL05B473KO5NNN#
29	0.55	16	X7R	68nF	±10%	CL05B683KO5NNN#
30	0.33	16	X7R	100nF	±10%	CL05B104KO3LNN#
31	0.55	16	X7R	100nF	±5%	CL05B104JO5NNN#
32	0.55	16	X7R	100nF	±10%	CL05B104KO5NFN#
33	0.55	16	X7R	100nF	±10%	CL05B104KO5NNN#
34	0.55	16	X7R	100nF	±20%	CL05B104MO5NNN#
35	0.55	16	X7R	220nF	±10%	CL05B224KO5NFN#
36	0.55	16	X7R	220nF	±10%	CL05B224KO5NNN#
37	0.55	25	X7R	560pF	±10%	CL05B561KA5NNN#
38	0.55	25	X7R	1.5nF	±10%	CL05B152KA5NNN#
39	0.55	25	X7R	3.3nF	±5%	CL05B332JA5NNN#
40	0.55	25	X7R	4.7nF	±10%	CL05B472KA5NFN#
41	0.55	25	X7R	4.7nF	±10%	CL05B472KA5NNN#
42	0.55	25	X7R	5.6nF	±10%	CL05B562KA5NNN#
43	0.55	25	X7R	6.8nF	±10%	CL05B682KA5NNN#
44	0.55	25	X7R	8.2nF	±10%	CL05B822KA5NNN#
45	0.55	25	X7R	10nF	±10%	CL05B103KA5NFN#
46	0.55	25	X7R	10nF	±10%	CL05B103KA5NNN#
47	0.55	25	X7R	18nF	±10%	CL05B183KA5NNN#
48	0.55	25	X7R	22nF	±10%	CL05B223KA5NNN#
49	0.55	25	X7R	47nF	±10%	CL05B473KA5NNN#
50	0.55	25	X7R	100nF	±10%	CL05B104KA5NNN#
51	0.55	50	X7R	180pF	±10%	CL05B181KB5NNN#
52	0.55	50	X7R	220pF	±5%	CL05B221JB5NNN#
53	0.55	50	X7R	220pF	±10%	CL05B221KB5NNN#
54	0.55	50	X7R	300pF	±10%	CL05B301KB5NNN#
55	0.55	50	X7R	330pF	±5%	CL05B331JB5NNN#

Normal Capacitors_Standard

Xin Yong Li

Size : 1.00 × 0.50mm (inch : 0402)

No.	Thickness Max. (mm)	Rated Voltage (Vdc)	TC code	Capacitance	Capacitance Tolerance	Part Number
56	0.55	50	X7R	330pF	±10%	CL05B331KB5NNN#
57	0.55	50	X7R	390pF	±10%	CL05B391KB5NNN#
58	0.55	50	X7R	470pF	±10%	CL05B471KB5NFN#
59	0.55	50	X7R	470pF	±10%	CL05B471KB5NNN#
60	0.55	50	X7R	560pF	±5%	CL05B561JB5NNN#
61	0.55	50	X7R	680pF	±5%	CL05B681JB5NNN#
62	0.55	50	X7R	680pF	±10%	CL05B681KB5NNN#
63	0.55	50	X7R	1nF	±5%	CL05B102JB5NNN#
64	0.55	50	X7R	1nF	±10%	CL05B102KB5NCN#
65	0.55	50	X7R	1nF	±10%	CL05B102KB5NFN#
66	0.55	50	X7R	1nF	±10%	CL05B102KB5NNN#
67	0.55	50	X7R	1.2nF	±5%	CL05B122JB5NNN#
68	0.55	50	X7R	1.5nF	±5%	CL05B152JB5NNN#
69	0.55	50	X7R	1.5nF	±10%	CL05B152KB5NNN#
70	0.55	50	X7R	1.8nF	±10%	CL05B182KB5NNN#
71	0.55	50	X7R	2.2nF	±5%	CL05B222JB5NNN#
72	0.55	50	X7R	2.2nF	±10%	CL05B222KB5NFN#
73	0.55	50	X7R	2.2nF	±10%	CL05B222KB5NNN#
74	0.55	50	X7R	2.7nF	±10%	CL05B272KB5NNN#
75	0.55	50	X7R	3.3nF	±10%	CL05B332KB5NFN#
76	0.55	50	X7R	3.3nF	±10%	CL05B332KB5NNN#
77	0.55	50	X7R	3.9nF	±10%	CL05B392KB5NNN#
78	0.55	50	X7R	4.7nF	±5%	CL05B472JB5NNN#
79	0.55	50	X7R	4.7nF	±10%	CL05B472KB5NFN#
80	0.55	50	X7R	4.7nF	±10%	CL05B472KB5NNN#
81	0.55	50	X7R	5.6nF	±10%	CL05B562KB5NFN#
82	0.55	50	X7R	5.6nF	±10%	CL05B562KB5NNN#
83	0.55	50	X7R	6.8nF	±5%	CL05B682JB5NNN#
84	0.55	50	X7R	6.8nF	±10%	CL05B682KB5NNN#
85	0.55	50	X7R	8.2nF	±10%	CL05B822KB5NNN#
86	0.55	50	X7R	10nF	±10%	CL05B103KB5NFN#
87	0.55	50	X7R	10nF	±10%	CL05B103KB5NNN#
88	0.55	50	X7R	15nF	±10%	CL05B153KB5NNN#
89	0.55	50	X7R	22nF	±10%	CL05B223KB5NNN#
90	0.55	50	X7R	100nF	±10%	CL05B104KB5NFN#
91	0.55	50	X7R	100nF	±10%	CL05B104KB5NNN#

Size : 1.60 × 0.80mm (inch : 0603)

No.	Thickness Max. (mm)	Rated Voltage (Vdc)	TC code	Capacitance	Capacitance Tolerance	Part Number
1	0.90	6.3	X7R	470nF	±10%	CL10B474KQ8NNN#
2	0.90	6.3	X7R	680nF	±10%	CL10B684KQ8NNN#
3	0.90	6.3	X7R	1uF	±10%	CL10B105KQ8NNN#
4	0.90	6.3	X7R	2.2uF	±10%	CL10B225KQ8NFN#
5	0.90	6.3	X7R	2.2uF	±10%	CL10B225KQ8NNN#
6	0.95	6.3	X7R	4.7uF	±10%	CL10B475KQ8NFQ#

Normal Capacitors_Standard

Xin Yong Li

Size : 1.60 × 0.80mm (inch : 0603)

No.	Thickness Max. (mm)	Rated Voltage (Vdc)	TC code	Capacitance	Capacitance Tolerance	Part Number
7	0.95	6.3	X7R	4.7uF	±10%	CL10B475KQ8NQN#
8	0.95	6.3	X7R	4.7uF	±20%	CL10B475MQ8NQN#
9	1.00	6.3	X7R	10uF	±20%	CL10B106MQ8NFR#
10	1.00	6.3	X7R	10uF	±20%	CL10B106MQ8NRN#
11	0.90	10	X7R	220nF	±5%	CL10B224JP8NNN#
12	0.90	10	X7R	220nF	±10%	CL10B224KP8NFN#
13	0.90	10	X7R	330nF	±10%	CL10B334KP8NNN#
14	0.90	10	X7R	470nF	±10%	CL10B474KP8NNN#
15	0.90	10	X7R	1uF	±10%	CL10B105KP8NFN#
16	0.90	10	X7R	1uF	±10%	CL10B105KP8NNN#
17	0.90	10	X7R	2.2uF	±10%	CL10B225KP8NFN#
18	0.90	10	X7R	2.2uF	±10%	CL10B225KP8NNN#
19	0.90	16	X7R	10nF	±10%	CL10B103KO8NNN#
20	0.90	16	X7R	15nF	±10%	CL10B153KO8NNN#
21	0.90	16	X7R	22nF	±10%	CL10B223KO8NNN#
22	0.90	16	X7R	27nF	±10%	CL10B273KO8NNN#
23	0.90	16	X7R	33nF	±10%	CL10B333KO8NFN#
24	0.90	16	X7R	39nF	±10%	CL10B393KO8NNN#
25	0.90	16	X7R	47nF	±5%	CL10B473JO8NNN#
26	0.90	16	X7R	47nF	±10%	CL10B473KO8NFN#
27	0.90	16	X7R	47nF	±10%	CL10B473KO8NNN#
28	0.90	16	X7R	56nF	±10%	CL10B563KO8NNN#
29	0.90	16	X7R	82nF	±10%	CL10B823KO8NNN#
30	0.90	16	X7R	100nF	±10%	CL10B104KO8NFN#
31	0.90	16	X7R	100nF	±10%	CL10B104KO8NNN#
32	0.90	16	X7R	150nF	±10%	CL10B154KO8NFN#
33	0.90	16	X7R	150nF	±10%	CL10B154KO8NNN#
34	0.90	16	X7R	220nF	±5%	CL10B224JO8NNN#
35	0.90	16	X7R	220nF	±5%	CL10B224JO8SFN#
36	0.90	16	X7R	220nF	±10%	CL10B224KO8NFN#
37	0.90	16	X7R	220nF	±10%	CL10B224KO8NNN#
38	0.90	16	X7R	220nF	±10%	CL10B224KO8SFN#
39	0.90	16	X7R	330nF	±10%	CL10B334KO8NFN#
40	0.90	16	X7R	330nF	±10%	CL10B334KO8NNN#
41	0.90	16	X7R	470nF	±10%	CL10B474KO8NFN#
42	0.90	16	X7R	470nF	±10%	CL10B474KO8NNN#
43	0.90	16	X7R	680nF	±10%	CL10B684KO8NFN#
44	0.90	16	X7R	1uF	±10%	CL10B105KO8NFN#
45	0.90	16	X7R	1uF	±10%	CL10B105KO8NNN#
46	0.90	16	X7R	1uF	±10%	CL10B105KO8ZFN#
47	0.90	25	X7R	4.7nF	±10%	CL10B472KA8NNN#
48	0.90	25	X7R	10nF	±10%	CL10B103KA8NFN#
49	0.90	25	X7R	10nF	±10%	CL10B103KA8NNN#
50	0.90	25	X7R	22nF	±10%	CL10B223KA8NFN#
51	0.90	25	X7R	27nF	±10%	CL10B273KA8NNN#
52	0.90	25	X7R	47nF	±10%	CL10B473KA8NFN#
53	0.90	25	X7R	56nF	±10%	CL10B563KA8NNN#

Normal Capacitors_Standard

Xin Yong Li

Size : 1.60 × 0.80mm (inch : 0603)

No.	Thickness Max. (mm)	Rated Voltage (Vdc)	TC code	Capacitance	Capacitance Tolerance	Part Number
54	0.90	25	X7R	68nF	±10%	CL10B683KA8NNN#
55	0.90	25	X7R	100nF	±5%	CL10B104JA8NNN#
56	0.90	25	X7R	100nF	±10%	CL10B104KA8NFN#
57	0.90	25	X7R	100nF	±10%	CL10B104KA8NNN#
58	0.90	25	X7R	150nF	±10%	CL10B154KA8NFN#
59	0.90	25	X7R	220nF	±10%	CL10B224KA8NFN#
60	0.90	25	X7R	220nF	±10%	CL10B224KA8NNN#
61	0.90	25	X7R	220nF	±10%	CL10B224KA8SFN#
62	0.90	25	X7R	470nF	±10%	CL10B474KA8NFN#
63	0.90	25	X7R	470nF	±10%	CL10B474KA8NNN#
64	0.90	25	X7R	1uF	±10%	CL10B105KA8NFN#
65	0.90	25	X7R	1uF	±10%	CL10B105KA8NNN#
66	0.90	25	X7R	1uF	±10%	CL10B105KA8ZFN#
67	0.90	50	X7R	100pF	±10%	CL10B101KB8NFN#
68	0.90	50	X7R	120pF	±10%	CL10B121KB8NNN#
69	0.90	50	X7R	150pF	±10%	CL10B151KB8NNN#
70	0.90	50	X7R	200pF	±10%	CL10B201KB8NNN#
71	0.90	50	X7R	220pF	±5%	CL10B221JB8NNN#
72	0.90	50	X7R	220pF	±10%	CL10B221KB8NFN#
73	0.90	50	X7R	220pF	±10%	CL10B221KB8NNN#
74	0.90	50	X7R	300pF	±10%	CL10B301KB8NNN#
75	0.90	50	X7R	330pF	±5%	CL10B331JB8NNN#
76	0.90	50	X7R	330pF	±10%	CL10B331KB8NFN#
77	0.90	50	X7R	330pF	±10%	CL10B331KB8NNN#
78	0.90	50	X7R	390pF	±10%	CL10B391KB8NNN#
79	0.90	50	X7R	470pF	±5%	CL10B471JB8NNN#
80	0.90	50	X7R	470pF	±10%	CL10B471KB8NFN#
81	0.90	50	X7R	470pF	±10%	CL10B471KB8NNN#
82	0.90	50	X7R	510pF	±10%	CL10B511KB8NNN#
83	0.90	50	X7R	560pF	±5%	CL10B561JB8NNN#
84	0.90	50	X7R	680pF	±5%	CL10B681JB8NNN#
85	0.90	50	X7R	680pF	±10%	CL10B681KB8NFN#
86	0.90	50	X7R	820pF	±10%	CL10B821KB8NFN#
87	0.90	50	X7R	1nF	±5%	CL10B102JB8NFN#
88	0.90	50	X7R	1nF	±10%	CL10B102KB8NCN#
89	0.90	50	X7R	1nF	±10%	CL10B102KB8NFN#
90	0.90	50	X7R	1nF	±10%	CL10B102KB8NNN#
91	0.90	50	X7R	1nF	±10%	CL10B102KB8SFN#
92	0.90	50	X7R	1.2nF	±10%	CL10B122KB8NFN#
93	0.90	50	X7R	1.2nF	±10%	CL10B122KB8NNN#
94	0.90	50	X7R	1.5nF	±10%	CL10B152KB8NFN#
95	0.90	50	X7R	1.5nF	±10%	CL10B152KB8NNN#
96	0.90	50	X7R	1.5nF	±10%	CL10B152KB8SFN#
97	0.90	50	X7R	1.8nF	±10%	CL10B182KB8NFN#
98	0.90	50	X7R	2nF	±10%	CL10B202KB8NNN#
99	0.90	50	X7R	2.2nF	±10%	CL10B222KB8NFN#
100	0.90	50	X7R	2.2nF	±10%	CL10B222KB8NNN#

Normal Capacitors_Standard

Xin Yong Li

Size : 1.60 × 0.80mm (inch : 0603)

No.	Thickness Max. (mm)	Rated Voltage (Vdc)	TC code	Capacitance	Capacitance Tolerance	Part Number
101	0.90	50	X7R	2.2nF	±10%	CL10B222KB8SFN#
102	0.90	50	X7R	2.7nF	±5%	CL10B272JB8NNN#
103	0.90	50	X7R	2.7nF	±10%	CL10B272KB8NFN#
104	0.90	50	X7R	2.7nF	±10%	CL10B272KB8NNN#
105	0.90	50	X7R	3.3nF	±10%	CL10B332KB8NFN#
106	0.90	50	X7R	3.3nF	±10%	CL10B332KB8NNN#
107	0.90	50	X7R	3.3nF	±20%	CL10B332MB8NNN#
108	0.90	50	X7R	3.9nF	±10%	CL10B392KB8NFN#
109	0.90	50	X7R	3.9nF	±10%	CL10B392KB8NNN#
110	0.90	50	X7R	4.7nF	±10%	CL10B472KB8NFN#
111	0.90	50	X7R	4.7nF	±10%	CL10B472KB8NNN#
112	0.90	50	X7R	4.7nF	±10%	CL10B472KB8SFN#
113	0.90	50	X7R	5.6nF	±5%	CL10B562JB8NNN#
114	0.90	50	X7R	5.6nF	±10%	CL10B562KB8NFN#
115	0.90	50	X7R	5.6nF	±10%	CL10B562KB8NNN#
116	0.90	50	X7R	6.8nF	±5%	CL10B682JB8NNN#
117	0.90	50	X7R	6.8nF	±10%	CL10B682KB8NFN#
118	0.90	50	X7R	6.8nF	±10%	CL10B682KB8NNN#
119	0.90	50	X7R	8.2nF	±10%	CL10B822KB8NFN#
120	0.90	50	X7R	10nF	±5%	CL10B103JB8NFN#
121	0.90	50	X7R	10nF	±10%	CL10B103KB8NFN#
122	0.90	50	X7R	10nF	±10%	CL10B103KB8NNN#
123	0.90	50	X7R	10nF	±20%	CL10B103MB8NCN#
124	0.90	50	X7R	10nF	±20%	CL10B103MB8NNN#
125	0.90	50	X7R	12nF	±10%	CL10B123KB8NNN#
126	0.90	50	X7R	15nF	±10%	CL10B153KB8NFN#
127	0.90	50	X7R	15nF	±10%	CL10B153KB8NNN#
128	0.90	50	X7R	18nF	±5%	CL10B183JB8NNN#
129	0.90	50	X7R	20nF	±10%	CL10B203KB8NNN#
130	0.90	50	X7R	22nF	±5%	CL10B223JB8NFN#
131	0.90	50	X7R	22nF	±10%	CL10B223KB8NFN#
132	0.90	50	X7R	22nF	±10%	CL10B223KB8NNN#
133	0.90	50	X7R	22nF	±10%	CL10B223KB8SFN#
134	0.90	50	X7R	27nF	±10%	CL10B273KB8NNN#
135	0.90	50	X7R	33nF	±10%	CL10B333KB8NFN#
136	0.90	50	X7R	33nF	±10%	CL10B333KB8NNN#
137	0.90	50	X7R	33nF	±10%	CL10B333KB8SFN#
138	0.90	50	X7R	39nF	±10%	CL10B393KB8NNN#
139	0.90	50	X7R	47nF	±5%	CL10B473JB8NNN#
140	0.90	50	X7R	47nF	±10%	CL10B473KB8NFN#
141	0.90	50	X7R	47nF	±10%	CL10B473KB8NNN#
142	0.90	50	X7R	47nF	±10%	CL10B473KB8SFN#
143	0.90	50	X7R	56nF	±10%	CL10B563KB8SFN#
144	0.90	50	X7R	68nF	±10%	CL10B683KB8NFN#
145	0.90	50	X7R	68nF	±10%	CL10B683KB8NNN#
146	0.90	50	X7R	82nF	±10%	CL10B823KB8NFN#
147	0.90	50	X7R	100nF	±5%	CL10B104JB8NNN#

Normal Capacitors_Standard

Xin Yong Li

Size : 1.60 × 0.80mm (inch : 0603)

No.	Thickness Max. (mm)	Rated Voltage (Vdc)	TC code	Capacitance	Capacitance Tolerance	Part Number
148	0.90	50	X7R	100nF	±10%	CL10B104KB8NFN#
149	0.90	50	X7R	100nF	±10%	CL10B104KB8NNN#
150	0.90	50	X7R	100nF	±10%	CL10B104KB8SFN#
151	0.90	50	X7R	100nF	±20%	CL10B104MB8NFN#
152	0.90	50	X7R	100nF	±20%	CL10B104MB8NNN#
153	0.90	50	X7R	220nF	±10%	CL10B224KB8NFN#
154	0.90	50	X7R	220nF	±10%	CL10B224KB8NNN#
155	0.90	50	X7R	220nF	±10%	CL10B224KB8SFN#
156	0.95	50	X7R	1uF	±10%	CL10B105KB8NQN#
157	0.90	100	X7R	1nF	±10%	CL10B102KC8NFN#
158	0.90	100	X7R	1nF	±10%	CL10B102KC8NNN#
159	0.90	100	X7R	1.5nF	±10%	CL10B152KC8NNN#
160	0.90	100	X7R	3.3nF	±10%	CL10B332KC8NNN#
161	0.90	100	X7R	4.7nF	±10%	CL10B472KC8NNN#
162	0.90	100	X7R	10nF	±10%	CL10B103KC8NNN#
163	0.90	100	X7R	100nF	±10%	CL10B104KC8NNN#

Size : 2.00 × 1.25mm (inch : 0805)

No.	Thickness Max. (mm)	Rated Voltage (Vdc)	TC code	Capacitance	Capacitance Tolerance	Part Number
1	1.40	6.3	X7R	10uF	±10%	CL21B106KQQNFN#
2	1.40	6.3	X7R	10uF	±10%	CL21B106KQQNNN#
3	1.35	10	X7R	680nF	±10%	CL21B684KPFNNN#
4	1.35	10	X7R	1uF	±10%	CL21B105KPFNNN#
5	1.35	10	X7R	1uF	±20%	CL21B105MPFNNN#
6	1.35	10	X7R	2.2uF	±10%	CL21B225KPFNNN#
7	1.35	10	X7R	3.3uF	±10%	CL21B335KPFNNN#
8	1.35	10	X7R	4.7uF	±10%	CL21B475KPFN3N#
9	1.35	10	X7R	4.7uF	±10%	CL21B475KPFNFN#
10	1.35	10	X7R	4.7uF	±10%	CL21B475KPFNNN#
11	1.40	10	X7R	10uF	±10%	CL21B106KPQNFN#
12	1.40	10	X7R	10uF	±10%	CL21B106KPQNNN#
13	1.40	10	X7R	10uF	±10%	CL21B106KPQZFN#
14	0.75	16	X7R	100nF	±10%	CL21B104KOANNN#
15	0.75	16	X7R	180nF	±10%	CL21B184KOANNN#
16	1.35	16	X7R	220nF	±10%	CL21B224KOFNNN#
17	0.95	16	X7R	330nF	±10%	CL21B334KOCNNN#
18	1.35	16	X7R	470nF	±10%	CL21B474KOFNFN#
19	1.35	16	X7R	470nF	±10%	CL21B474KOFNNN#
20	1.35	16	X7R	680nF	±5%	CL21B684JOFNNN#
21	1.35	16	X7R	680nF	±10%	CL21B684KOFNFN#
22	1.35	16	X7R	1uF	±10%	CL21B105KOFNFN#
23	1.35	16	X7R	1uF	±10%	CL21B105KOFNNN#
24	1.35	16	X7R	1uF	±10%	CL21B105KOFSFN#
25	1.35	16	X7R	1uF	±20%	CL21B105MOFNNN#
26	1.35	16	X7R	2.2uF	±10%	CL21B225KOFNFN#

Normal Capacitors_Standard

Size : 2.00 × 1.25mm (inch : 0805)

No.	Thickness Max. (mm)	Rated Voltage (Vdc)	TC code	Capacitance	Capacitance Tolerance	Part Number
27	1.35	16	X7R	2.2uF	±10%	CL21B225KOFNNN#
28	1.35	16	X7R	4.7uF	±10%	CL21B475KOFNFN#
29	1.35	16	X7R	4.7uF	±10%	CL21B475KOFNNN#
30	1.35	16	X7R	4.7uF	±10%	CL21B475KOFZFN#
31	1.40	16	X7R	10uF	±10%	CL21B106KOQNFN#
32	1.40	16	X7R	10uF	±10%	CL21B106KOQNNN#
33	0.75	25	X7R	1nF	±10%	CL21B102KAANFN#
34	0.75	25	X7R	10nF	±10%	CL21B103KAANNN#
35	0.95	25	X7R	100nF	±10%	CL21B104KACNFN#
36	0.95	25	X7R	100nF	±10%	CL21B104KACNNN#
37	0.95	25	X7R	100nF	±20%	CL21B104MACNNN#
38	1.35	25	X7R	100nF	±10%	CL21B104KAFNNN#
39	0.95	25	X7R	120nF	±5%	CL21B124JACNNN#
40	0.95	25	X7R	120nF	±10%	CL21B124KACNNN#
41	1.35	25	X7R	220nF	±5%	CL21B224JAFNNN#
42	1.35	25	X7R	220nF	±10%	CL21B224KAFNFN#
43	1.35	25	X7R	220nF	±10%	CL21B224KAFNNN#
44	1.35	25	X7R	470nF	±5%	CL21B474JAFNNN#
45	1.35	25	X7R	470nF	±10%	CL21B474KAFNFN#
46	1.35	25	X7R	470nF	±10%	CL21B474KAFNNN#
47	1.35	25	X7R	470nF	±10%	CL21B474KAFSFN#
48	1.35	25	X7R	470nF	±20%	CL21B474MAFNNN#
49	1.35	25	X7R	1uF	±10%	CL21B105KAFN3N#
50	1.35	25	X7R	1uF	±10%	CL21B105KAFNFN#
51	1.35	25	X7R	1uF	±10%	CL21B105KAFNNN#
52	1.35	25	X7R	1uF	±10%	CL21B105KAFSFN#
53	1.35	25	X7R	1uF	±20%	CL21B105MAFNNN#
54	1.35	25	X7R	1.5uF	±10%	CL21B155KAFNFN#
55	1.35	25	X7R	2.2uF	±10%	CL21B225KAFNFN#
56	1.35	25	X7R	2.2uF	±10%	CL21B225KAFNNN#
57	1.35	25	X7R	2.2uF	±20%	CL21B225MAFNNN#
58	1.35	25	X7R	3.3uF	±10%	CL21B335KAFNFN#
59	1.35	25	X7R	4.7uF	±10%	CL21B475KAFNFN#
60	1.35	25	X7R	4.7uF	±10%	CL21B475KAFNNN#
61	1.35	25	X7R	4.7uF	±10%	CL21B475KAFZF6#
62	1.35	25	X7R	4.7uF	±10%	CL21B475KAFZFN#
63	1.35	25	X7R	4.7uF	±20%	CL21B475MAFNNN#
64	0.75	50	X7R	180pF	±10%	CL21B181KBANNN#
65	0.75	50	X7R	200pF	±10%	CL21B201KBANNN#
66	0.75	50	X7R	220pF	±10%	CL21B221KBANFN#
67	0.75	50	X7R	300pF	±10%	CL21B301KBANNN#
68	0.75	50	X7R	330pF	±5%	CL21B331JBANNN#
69	0.75	50	X7R	470pF	±5%	CL21B471JBANNN#
70	0.75	50	X7R	470pF	±10%	CL21B471KBANFN#
71	0.75	50	X7R	510pF	±10%	CL21B511KBANNN#
72	0.75	50	X7R	680pF	±10%	CL21B681KBANFN#
73	0.75	50	X7R	1nF	±5%	CL21B102JBANFN#

Xin Yong Li

Normal Capacitors_Standard

Xin Yong Li

Size : 2.00 × 1.25mm (inch : 0805)

No.	Thickness Max. (mm)	Rated Voltage (Vdc)	TC code	Capacitance	Capacitance Tolerance	Part Number
74	0.75	50	X7R	1nF	±10%	CL21B102KBANFN#
75	0.75	50	X7R	1nF	±10%	CL21B102KBANNN#
76	0.95	50	X7R	1nF	±10%	CL21B102KBCNNN#
77	0.75	50	X7R	1.2nF	±10%	CL21B122KBANNN#
78	0.75	50	X7R	2nF	±10%	CL21B202KBANNN#
79	0.75	50	X7R	2.2nF	±5%	CL21B222JBANNN#
80	0.75	50	X7R	2.2nF	±10%	CL21B222KBANFN#
81	0.75	50	X7R	2.2nF	±10%	CL21B222KBANNN#
82	0.95	50	X7R	2.2nF	±10%	CL21B222KBCNNN#
83	0.75	50	X7R	2.7nF	±10%	CL21B272KBANNN#
84	0.75	50	X7R	3.3nF	±5%	CL21B332JBANNN#
85	0.75	50	X7R	3.9nF	±10%	CL21B392KBANNN#
86	0.75	50	X7R	4.7nF	±10%	CL21B472KBANFN#
87	0.75	50	X7R	4.7nF	±10%	CL21B472KBANNN#
88	0.75	50	X7R	5.6nF	±5%	CL21B562JBANNN#
89	0.75	50	X7R	5.6nF	±10%	CL21B562KBANFN#
90	0.75	50	X7R	5.6nF	±10%	CL21B562KBANNN#
91	0.75	50	X7R	6.8nF	±10%	CL21B682KBANFN#
92	0.75	50	X7R	8.2nF	±10%	CL21B822KBANNN#
93	0.75	50	X7R	10nF	±10%	CL21B103KBANFN#
94	0.75	50	X7R	10nF	±10%	CL21B103KBANNN#
95	0.75	50	X7R	10nF	±20%	CL21B103MBANNN#
96	0.95	50	X7R	10nF	±5%	CL21B103JBCNNN#
97	0.95	50	X7R	10nF	±10%	CL21B103KBCNNN#
98	0.75	50	X7R	15nF	±5%	CL21B153JBANNN#
99	0.75	50	X7R	15nF	±10%	CL21B153KBANFN#
100	0.75	50	X7R	18nF	±10%	CL21B183KBANNN#
101	0.75	50	X7R	20nF	±10%	CL21B203KBANNN#
102	0.75	50	X7R	22nF	±5%	CL21B223JBANNN#
103	0.75	50	X7R	22nF	±10%	CL21B223KBANFN#
104	0.75	50	X7R	22nF	±10%	CL21B223KBANNN#
105	0.75	50	X7R	27nF	±10%	CL21B273KBANNN#
106	0.75	50	X7R	33nF	±10%	CL21B333KBANFN#
107	0.75	50	X7R	39nF	±10%	CL21B393KBANNN#
108	0.95	50	X7R	47nF	±10%	CL21B473KBCNFN#
109	0.95	50	X7R	47nF	±10%	CL21B473KBCNNN#
110	0.95	50	X7R	47nF	±20%	CL21B473MBCNNN#
111	0.95	50	X7R	56nF	±10%	CL21B563KBCNNN#
112	0.95	50	X7R	68nF	±5%	CL21B683JBCNNN#
113	0.95	50	X7R	68nF	±10%	CL21B683KBCNFN#
114	1.35	50	X7R	68nF	±10%	CL21B683KBFNNN#
115	0.95	50	X7R	82nF	±10%	CL21B823KBCNNN#
116	1.35	50	X7R	82nF	±10%	CL21B823KBFNNN#
117	0.95	50	X7R	100nF	±5%	CL21B104JBCNFN#
118	0.95	50	X7R	100nF	±10%	CL21B104KBCNFN#
119	0.95	50	X7R	100nF	±10%	CL21B104KBCNNN#
120	0.95	50	X7R	100nF	±10%	CL21B104KBCSFN#

Normal Capacitors_Standard

Xin Yong Li

Size : 2.00 × 1.25mm (inch : 0805)

No.	Thickness Max. (mm)	Rated Voltage (Vdc)	TC code	Capacitance	Capacitance Tolerance	Part Number
121	1.35	50	X7R	100nF	±10%	CL21B104KBFNNN#
122	1.35	50	X7R	100nF	±20%	CL21B104MBFNNN#
123	1.35	50	X7R	120nF	±10%	CL21B124KBFNNN#
124	1.35	50	X7R	150nF	±10%	CL21B154KBFNFN#
125	1.35	50	X7R	150nF	±10%	CL21B154KBFNNN#
126	1.35	50	X7R	220nF	±10%	CL21B224KBFNFN#
127	1.35	50	X7R	220nF	±10%	CL21B224KBFNNN#
128	1.35	50	X7R	330nF	±10%	CL21B334KBFNFN#
129	1.35	50	X7R	330nF	±10%	CL21B334KBFNNN#
130	1.35	50	X7R	330nF	±20%	CL21B334MBFNNN#
131	1.35	50	X7R	470nF	±10%	CL21B474KBFNFN#
132	1.35	50	X7R	470nF	±10%	CL21B474KBFNNN#
133	1.35	50	X7R	680nF	±10%	CL21B684KBFNNN#
134	1.35	50	X7R	1uF	±10%	CL21B105KBFNFN#
135	1.35	50	X7R	1uF	±10%	CL21B105KBFNNN#
136	1.35	50	X7R	1uF	±10%	CL21B105KBFSFN#
137	1.35	50	X7R	1uF	±10%	CL21B105KBFZFN#
138	1.35	50	X7R	1uF	±20%	CL21B105MBFNNN#
139	0.75	100	X7R	220pF	±10%	CL21B221KCANFN#
140	0.75	100	X7R	270pF	±10%	CL21B271KCANNN#
141	0.75	100	X7R	1nF	±5%	CL21B102JCANNN#
142	0.75	100	X7R	1nF	±10%	CL21B102KCANNN#
143	0.75	100	X7R	1.5nF	±10%	CL21B152KCANNN#
144	0.75	100	X7R	2.2nF	±10%	CL21B222KCANFN#
145	0.75	100	X7R	4.7nF	±10%	CL21B472KCANFN#
146	0.75	100	X7R	10nF	±10%	CL21B103KCANFN#
147	0.75	100	X7R	10nF	±10%	CL21B103KCANNN#
148	0.95	100	X7R	15nF	±10%	CL21B153KCCNNN#
149	1.35	100	X7R	22nF	±10%	CL21B223KCFNNN#
150	1.35	100	X7R	47nF	±10%	CL21B473KCFNNN#
151	1.35	100	X7R	100nF	±10%	CL21B104KCFNNN#
152	1.35	100	X7R	100nF	±10%	CL21B104KCFSFN#
153	1.35	100	X7R	220nF	±10%	CL21B224KCFSFN#
154	0.95	200	X7R	220pF	±10%	CL21B221KDCNFN#
155	0.95	200	X7R	470pF	±10%	CL21B471KDCNFN#
156	0.95	200	X7R	1nF	±5%	CL21B102JDCNNN#
157	0.95	200	X7R	1nF	±10%	CL21B102KDCNFN#
158	0.95	200	X7R	2.2nF	±10%	CL21B222KDCNFN#
159	0.95	200	X7R	4.7nF	±10%	CL21B472KDCNNN#
160	0.95	200	X7R	10nF	±10%	CL21B103KDCNFN#
161	0.95	200	X7R	10nF	±10%	CL21B103KDCNNN#
162	0.95	250	X7R	1nF	±10%	CL21B102KECSFN#
163	0.95	250	X7R	1nF	±10%	CL21B102KECSNN#
164	1.35	250	X7R	10nF	±10%	CL21B103KEFNNN#

Normal Capacitors_Standard

Xin Yong Li

Size : 3.20 × 1.60mm (inch : 1206)

No.	Thickness Max. (mm)	Rated Voltage (Vdc)	TC code	Capacitance	Capacitance Tolerance	Part Number
1	1.80	6.3	X7R	10uF	±10%	CL31B106KQHNFN#
2	1.80	6.3	X7R	10uF	±10%	CL31B106KQHNNN#
3	1.80	6.3	X7R	22uF	±10%	CL31B226KQHNNN#
4	1.80	10	X7R	4.7uF	±10%	CL31B475KPHNFN#
5	1.80	10	X7R	4.7uF	±10%	CL31B475KPHNNN#
6	1.80	10	X7R	10uF	±10%	CL31B106KPHNFN#
7	1.80	10	X7R	10uF	±10%	CL31B106KPHNNN#
8	1.80	10	X7R	22uF	±10%	CL31B226KPHNFN#
9	1.80	10	X7R	22uF	±10%	CL31B226KPHNNN#
10	1.80	10	X7R	22uF	±20%	CL31B226MPHNNN#
11	1.00	16	X7R	330nF	±10%	CL31B334KOCNNN#
12	1.00	16	X7R	470nF	±10%	CL31B474KOCNNN#
13	1.00	16	X7R	680nF	±10%	CL31B684KOCNNN#
14	1.40	16	X7R	1uF	±10%	CL31B105KOFNFN#
15	1.40	16	X7R	1uF	±10%	CL31B105KOFNNN#
16	1.40	16	X7R	1uF	±20%	CL31B105MOFNNN#
17	1.40	16	X7R	1.5uF	±10%	CL31B155KOFNNN#
18	1.80	16	X7R	2.2uF	±10%	CL31B225KOHNFN#
19	1.80	16	X7R	2.2uF	±10%	CL31B225KOHNNN#
20	1.80	16	X7R	2.2uF	±20%	CL31B225MOHNNN#
21	1.80	16	X7R	3.3uF	±10%	CL31B335KOHNFN#
22	1.80	16	X7R	3.3uF	±10%	CL31B335KOHNNN#
23	1.80	16	X7R	4.7uF	±10%	CL31B475KOHNFN#
24	1.80	16	X7R	4.7uF	±10%	CL31B475KOHNNN#
25	1.80	16	X7R	10uF	±10%	CL31B106KOHNFN#
26	1.80	16	X7R	10uF	±10%	CL31B106KOHNNN#
27	1.80	16	X7R	10uF	±10%	CL31B106KOHZFN#
28	1.80	16	X7R	10uF	±20%	CL31B106MOHNNN#
29	1.00	25	X7R	220nF	±10%	CL31B224KACNFN#
30	1.00	25	X7R	220nF	±10%	CL31B224KACNNN#
31	1.00	25	X7R	330nF	±10%	CL31B334KACNNN#
32	1.80	25	X7R	680nF	±10%	CL31B684KAHNNN#
33	1.25	25	X7R	1uF	±10%	CL31B105KAPLNN#
34	1.80	25	X7R	1uF	±5%	CL31B105JAHNNN#
35	1.80	25	X7R	1uF	±10%	CL31B105KAHNFN#
36	1.80	25	X7R	1uF	±10%	CL31B105KAHNNN#
37	1.80	25	X7R	1uF	±20%	CL31B105MAHNNN#
38	1.80	25	X7R	2.2uF	±10%	CL31B225KAHNFN#
39	1.80	25	X7R	2.2uF	±10%	CL31B225KAHNNN#
40	1.80	25	X7R	4.7uF	±10%	CL31B475KAHNFN#
41	1.80	25	X7R	4.7uF	±10%	CL31B475KAHNNN#
42	1.80	25	X7R	10uF	±10%	CL31B106KAHNFN#
43	1.80	25	X7R	10uF	±10%	CL31B106KAHNNN#
44	1.80	25	X7R	10uF	±10%	CL31B106KAHSFN#
45	1.80	35	X7R	10uF	±10%	CL31B106KLHNFN#
46	1.80	35	X7R	10uF	±10%	CL31B106KLHNNN#
47	1.80	35	X7R	10uF	±10%	CL31B106KLHSFN#
48	1.00	50	X7R	330pF	±10%	CL31B331KBCNNN#
49	1.00	50	X7R	560pF	±10%	CL31B561KBCNNN#

Normal Capacitors_Standard

Xin Yong Li

Size : 3.20 × 1.60mm (inch : 1206)

No.	Thickness Max. (mm)	Rated Voltage (Vdc)	TC code	Capacitance	Capacitance Tolerance	Part Number
50	1.00	50	X7R	680pF	±10%	CL31B681KBCNNN#
51	1.00	50	X7R	1nF	±10%	CL31B102KBCNNN#
52	1.00	50	X7R	1.5nF	±10%	CL31B152KBCNNN#
53	1.00	50	X7R	3.3nF	±10%	CL31B332KBCNNN#
54	1.00	50	X7R	8.2nF	±10%	CL31B822KBCNNN#
55	1.00	50	X7R	10nF	±10%	CL31B103KBCNFN#
56	1.00	50	X7R	10nF	±20%	CL31B103MBCNNN#
57	1.00	50	X7R	33nF	±5%	CL31B333JBCNNN#
58	1.00	50	X7R	47nF	±5%	CL31B473JBCNNN#
59	1.00	50	X7R	47nF	±10%	CL31B473KBCNNN#
60	1.00	50	X7R	100nF	±10%	CL31B104KBCNFN#
61	1.00	50	X7R	100nF	±10%	CL31B104KBCNNN#
62	1.00	50	X7R	100nF	±20%	CL31B104MBCNNN#
63	1.00	50	X7R	150nF	±10%	CL31B154KBCNNN#
64	1.40	50	X7R	220nF	±10%	CL31B224KBFNFN#
65	1.40	50	X7R	220nF	±10%	CL31B224KBFNNN#
66	1.40	50	X7R	330nF	±5%	CL31B334JBFNNN#
67	1.40	50	X7R	330nF	±10%	CL31B334KBFNFN#
68	1.40	50	X7R	330nF	±10%	CL31B334KBFNNN#
69	1.80	50	X7R	470nF	±10%	CL31B474KBHNFN#
70	1.80	50	X7R	470nF	±10%	CL31B474KBHNNN#
71	1.80	50	X7R	470nF	±20%	CL31B474MBHNNN#
72	1.80	50	X7R	1uF	±10%	CL31B105KBHNFN#
73	1.80	50	X7R	1uF	±10%	CL31B105KBHNNN#
74	1.80	50	X7R	1uF	±10%	CL31B105KBHSNN#
75	1.80	50	X7R	2.2uF	±10%	CL31B225KBHNFN#
76	1.80	50	X7R	2.2uF	±10%	CL31B225KBHNNN#
77	1.80	50	X7R	4.7uF	±10%	CL31B475KBHN3N#
78	1.80	50	X7R	4.7uF	±10%	CL31B475KBHNFN#
79	1.80	50	X7R	4.7uF	±10%	CL31B475KBHNNN#
80	1.80	50	X7R	4.7uF	±10%	CL31B475KBHZFN#
81	1.80	50	X7R	10uF	±10%	CL31B106KBHNFN#
82	1.80	50	X7R	10uF	±10%	CL31B106KBHNNN#
83	1.00	100	X7R	2.2nF	±10%	CL31B222KCCNNN#
84	1.00	100	X7R	3.3nF	±10%	CL31B332KCCNNN#
85	1.00	100	X7R	10nF	±10%	CL31B103KCCNFN#
86	1.00	100	X7R	22nF	±10%	CL31B223KCCNFN#
87	1.00	100	X7R	22nF	±10%	CL31B223KCCNNN#
88	1.00	100	X7R	33nF	±10%	CL31B333KCCNNN#
89	1.40	100	X7R	100nF	±5%	CL31B104JCFNNN#
90	1.40	100	X7R	100nF	±10%	CL31B104KCFNFN#
91	1.40	100	X7R	100nF	±10%	CL31B104KCFNNN#
92	1.80	100	X7R	470nF	±10%	CL31B474KCHSFN#
93	1.80	100	X7R	1uF	±10%	CL31B105KCHNFN#
94	1.80	100	X7R	1uF	±10%	CL31B105KCHNNN#
95	1.80	100	X7R	1uF	±10%	CL31B105KCHSFN#
96	1.80	100	X7R	1uF	±10%	CL31B105KCHSNN#
97	1.80	100	X7R	2.2uF	±10%	CL31B225KCHSFN#
98	1.80	100	X7R	2.2uF	±10%	CL31B225KCHSNN#

Normal Capacitors_Standard

Xin Yong Li

Size : 3.20 × 1.60mm (inch : 1206)

No.	Thickness Max. (mm)	Rated Voltage (Vdc)	TC code	Capacitance	Capacitance Tolerance	Part Number
99	1.00	200	X7R	470pF	±10%	CL31B471KDCNNN#
100	1.00	200	X7R	1nF	±10%	CL31B102KDCNNN#
101	1.00	200	X7R	10nF	±10%	CL31B103KDCNFN#
102	1.40	200	X7R	33nF	±10%	CL31B333KDFNNN#
103	1.80	200	X7R	100nF	±10%	CL31B104KDHNFN#
104	1.80	250	X7R	33nF	±10%	CL31B333KEHNNN#
105	1.80	250	X7R	47nF	±10%	CL31B473KEHNNN#
106	1.80	250	X7R	47nF	±10%	CL31B473KEHSFN#
107	1.80	250	X7R	100nF	±10%	CL31B104KEHNFN#
108	1.80	250	X7R	100nF	±10%	CL31B104KEHNNN#
109	1.80	250	X7R	100nF	±10%	CL31B104KEHSFN#
110	1.40	500	X7R	220pF	±10%	CL31B221KGFNNN#
111	1.40	500	X7R	470pF	±10%	CL31B471KGFNNN#
112	1.40	500	X7R	680pF	±10%	CL31B681KGFNNN#
113	1.40	500	X7R	1nF	±10%	CL31B102KGFNFN#
114	1.40	500	X7R	1nF	±10%	CL31B102KGFNNN#
115	1.40	500	X7R	1.5nF	±10%	CL31B152KGFNFN#
116	1.40	500	X7R	1.5nF	±10%	CL31B152KGFNNN#
117	1.40	500	X7R	2.2nF	±10%	CL31B222KGFNFN#
118	1.40	500	X7R	3.3nF	±10%	CL31B332KGFNFN#
119	1.40	500	X7R	4.7nF	±10%	CL31B472KGFNFN#
120	1.40	500	X7R	6.8nF	±10%	CL31B682KGFNNN#
121	1.40	500	X7R	10nF	±10%	CL31B103KGFNFN#
122	1.80	500	X7R	22nF	±10%	CL31B223KGHNNN#
123	1.80	500	X7R	33nF	±10%	CL31B333KGHNFN#
124	1.40	630	X7R	330pF	±10%	CL31B331KHFNNN#
125	1.40	630	X7R	470pF	±10%	CL31B471KHFNNN#
126	1.40	630	X7R	680pF	±10%	CL31B681KHFNNN#
127	1.40	630	X7R	1nF	±10%	CL31B102KHFNFN#
128	1.40	630	X7R	1nF	±10%	CL31B102KHFSFN#
129	1.40	630	X7R	1.5nF	±10%	CL31B152KHFNFN#
130	1.40	630	X7R	2.2nF	±10%	CL31B222KHFNFN#
131	1.40	630	X7R	2.2nF	±10%	CL31B222KHFSFN#
132	1.40	630	X7R	3.3nF	±10%	CL31B332KHFSFN#
133	1.40	630	X7R	4.7nF	±10%	CL31B472KHFNFN#
134	1.40	630	X7R	4.7nF	±10%	CL31B472KHFNNN#
135	1.40	630	X7R	4.7nF	±10%	CL31B472KHFSFN#
136	1.40	630	X7R	6.8nF	±10%	CL31B682KHFNFN#
137	1.40	630	X7R	10nF	±10%	CL31B103KHFNFN#
138	1.40	630	X7R	10nF	±10%	CL31B103KHFNNN#
139	1.40	630	X7R	10nF	±10%	CL31B103KHFSFN#
140	1.80	630	X7R	22nF	±10%	CL31B223KHHNFN#
141	1.80	630	X7R	22nF	±10%	CL31B223KHHNNN#
142	1.80	630	X7R	22nF	±10%	CL31B223KHHSFN#
143	1.80	630	X7R	33nF	±10%	CL31B333KHHNFN#
144	1.80	630	X7R	33nF	±10%	CL31B333KHHSFN#
145	1.40	1000	X7R	680pF	±10%	CL31B681KIFNNN#
146	1.40	1000	X7R	1nF	±10%	CL31B102KIFNFN#
147	1.40	1000	X7R	1nF	±10%	CL31B102KIFNNN#

Normal Capacitors_Standard

Xin Yong Li

Size : 3.20 × 1.60mm (inch : 1206)

No.	Thickness Max. (mm)	Rated Voltage (Vdc)	TC code	Capacitance	Capacitance Tolerance	Part Number
148	1.40	1000	X7R	2.2nF	±10%	CL31B222KIFNFN#
149	1.40	1000	X7R	2.2nF	±10%	CL31B222KIFNNN#
150	1.80	2000	X7R	1nF	±10%	CL31B102KJHNNN#

Size : 3.20 × 2.50mm (inch : 1210)

No.	Thickness Max. (mm)	Rated Voltage (Vdc)	TC code	Capacitance	Capacitance Tolerance	Part Number
1	2.70	6.3	X7R	47uF	±20%	CL32B476MQJNNN#
2	2.20	10	X7R	10uF	±10%	CL32B106KPINNN#
3	2.70	10	X7R	22uF	±10%	CL32B226KPJNNN#
4	2.70	10	X7R	47uF	±10%	CL32B476KPJNNN#
5	2.70	10	X7R	47uF	±20%	CL32B476MPJNNN#
6	2.20	16	X7R	4.7uF	±10%	CL32B475KOINNN#
7	2.00	16	X7R	10uF	±10%	CL32B106KOULNN#
8	2.70	16	X7R	10uF	±10%	CL32B106KOJNNN#
9	2.70	16	X7R	22uF	±10%	CL32B226KOJNFN#
10	2.70	16	X7R	22uF	±10%	CL32B226KOJNNN#
11	2.70	16	X7R	22uF	±20%	CL32B226MOJNNN#
12	1.45	25	X7R	1uF	±10%	CL32B105KAFNNN#
13	2.20	25	X7R	2.2uF	±10%	CL32B225KAINNN#
14	2.00	25	X7R	10uF	±10%	CL32B106KAUL3N#
15	2.00	25	X7R	10uF	±10%	CL32B106KAULNN#
16	2.70	25	X7R	10uF	±10%	CL32B106KAJNFN#
17	2.70	25	X7R	10uF	±10%	CL32B106KAJNNN#
18	2.70	25	X7R	22uF	±10%	CL32B226KAJNFN#
19	2.70	25	X7R	22uF	±10%	CL32B226KAJNNN#
20	2.00	35	X7R	10uF	±10%	CL32B106KLULNN#
21	2.70	35	X7R	10uF	±10%	CL32B106KLJNNN#
22	1.45	50	X7R	150nF	±10%	CL32B154KBFNNN#
23	1.45	50	X7R	470nF	±10%	CL32B474KBFNNN#
24	1.80	50	X7R	1uF	±10%	CL32B105KBHNNN#
25	1.80	50	X7R	1uF	±20%	CL32B105MBHNNN#
26	2.70	50	X7R	2.2uF	±10%	CL32B225KBJNNN#
27	2.00	50	X7R	4.7uF	±10%	CL32B475KBUYFN#
28	2.00	50	X7R	4.7uF	±10%	CL32B475KBUYNN#
29	2.70	50	X7R	4.7uF	±10%	CL32B475KBJNFN#
30	2.70	50	X7R	4.7uF	±10%	CL32B475KBJNNN#
31	2.80	50	X7R	4.7uF	±10%	CL32B475KBVZNN#
32	2.70	50	X7R	10uF	±10%	CL32B106KBJNFN#
33	2.70	50	X7R	10uF	±10%	CL32B106KBJNNN#
34	2.70	100	X7R	1uF	±10%	CL32B105KCJNNN#
35	2.70	100	X7R	1uF	±10%	CL32B105KCJSNN#
36	2.70	100	X7R	2.2uF	±10%	CL32B225KCJSFN#
37	2.70	100	X7R	2.2uF	±10%	CL32B225KCJSNN#
38	2.70	250	X7R	100nF	±10%	CL32B104KEJNNN#
39	1.45	500	X7R	10nF	±10%	CL32B103KGFNNN#

Normal Capacitors_High Level Ⅰ

Normal High Level Ⅰ

Xin Yong Li

Features

- A High level Ⅰ MLCC is a chip-type capacitor suitable for industrial applicatons, with greater reliability than a general MLCC.
- It has improved the moisture resistance characteristics.
- In the outgoing inspection, proceed with the bending strength evaluation strengthen.

1. Ceramic Body
2. Electrode (Ni/Cu*)
3. Plating (Ni)
4. Termination (Cu or Cu+Metal Epoxy)
5. Plating (Sn)

High Level Ⅰ — Improved Reliability (65℃, 90%RH, 1Vr, 500H)

High Level Ⅱ — Reinforced Reliability (85℃, 85%RH, 1Vr, 1000H)

* Internal Cu electrode is only applied to limited products.

Application

- Server, Network, Base station, Solar Inverter, DC-DC Converter

Structure and Dimensions

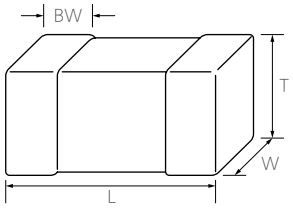

Size Code	Dimension (mm)				EIA (inch)
	L	W	T	BW	
03	0.60±0.03	0.30±0.03	0.30±0.03	0.15±0.05	0201
	0.60±0.05	0.30±0.05	0.30±0.05		
05	1.00±0.05	0.50±0.05	0.50±0.05	0.25±0.10	0402
	1.00±0.10	0.50±0.10	0.50±0.10		
	1.00±0.15	0.50±0.15	0.50±0.15		
	1.00±0.20	0.50±0.20	0.50±0.20		
10	1.60±0.10	0.80±0.10	0.80±0.10	0.30±0.20	0603
	1.60±0.15	0.80±0.15	0.80±0.15		
	1.60±0.20	0.80±0.20	0.80±0.20		
	1.60±0.25	0.80±0.25	0.80±0.25		
21	2.00±0.10	1.25±0.10	0.65±0.10	0.5+0.2/-0.3	0805
	2.00±0.10	1.25±0.10	0.85±0.10		
	2.00±0.10	1.25±0.10	1.25±0.10		
	2.00±0.15	1.25±0.15	1.25±0.15		
	2.00±0.20	1.25±0.20	1.25±0.20		
31	3.20±0.15	1.60±0.15	0.85±0.15	0.50±0.30	1206
	3.20±0.15	1.60±0.15	1.25±0.15		
	3.20±0.20	1.60±0.20	1.60±0.20		
	3.20±0.30	1.60±0.20	1.60±0.20		
	3.20±0.30	1.60±0.30	1.60±0.30		
32	3.20±0.15	1.60±0.15	0.85±0.15	0.60±0.30	1210
	3.20±0.15	1.60±0.15	1.25±0.15		
	3.20±0.20	1.60±0.20	1.60±0.20		
	3.20±0.30	1.60±0.20	1.60±0.20		
	3.20±0.30	1.60±0.30	1.60±0.30		

Normal Capacitors_High Level Ⅰ

Xin Yong Li

Capacitance Table (C0G)

Category	TC	Size mm (inch)	Rated Voltage (Vdc)	Capacitance Range
High Level Ⅰ	C0G	0603 (0201)	25	10nF - 100nF
			50	33pF - 47pF
		1005 (0402)	50	0.5pF - 1nF
		1608 (0603)	25	680pF - 1.5nF
			50	1pF - 2.2nF
			100	10pF - 330pF
		2012 (0805)	50	33pF - 10nF
			100	330pF - 1nF
			200	220pF - 220pF
			250	10pF - 10pF
		3216 (1206)	25	10nF - 10nF
			50	1.5nF - 33nF
			100	1nF - 1nF
			500	10pF - 39pF
			630	220pF - 220pF
		3225 (1210)	100	47nF - 47nF

Capacitance Table (X5R)

Category	TC	Size mm (inch)	Rated Voltage (Vdc)	Capacitance Range
High Level Ⅰ	X5R (85℃)	0603 (0201)	6.3	10nF - 470nF
			10	2.2nF - 100nF
		1005 (0402)	4	2.2uF - 4.7uF
			6.3	220nF - 4.7uF
			10	100nF - 1uF
			16	100nF - 1uF
			25	100nF - 1uF
		1608 (0603)	4	10uF - 47uF
			6.3	2.2uF - 10uF
			10	470nF - 4.7uF
			16	1uF - 2.2uF
			25	220nF - 1uF
		2012 (0805)	4	47uF - 47uF
			6.3	4.7uF - 47uF
			10	2.2uF - 22uF
			16	10uF - 22uF
			25	2.2uF - 22uF
		3216 (1206)	6.3	22uF - 100uF
			10	22uF - 47uF
			16	22uF - 22uF
			25	4.7uF - 22uF
		3225 (1210)	6.3	22uF - 100uF
			10	22uF - 22uF
			16	22uF - 47uF
			25	22uF - 22uF

Normal Capacitors_High Level Ⅰ

Xin Yong Li

Capacitance Table (X6S)

Category	TC	Size mm (inch)	Rated Voltage (Vdc)	Capacitance Range
High Level Ⅰ	X6S (105℃)	0603 (0201)	6.3	100nF - 100nF
			16	100nF - 100nF
		1005 (0402)	6.3	470nF - 1uF
			10	1uF - 2.2uF
			25	1uF - 1uF
		1608 (0603)	2.5	47uF - 47uF
			4	4.7uF - 47uF
			6.3	4.7uF - 22uF
			10	10uF - 10uF
			16	4.7uF - 4.7uF
		2012 (0805)	4	22uF - 47uF
			6.3	10uF - 22uF
			10	22uF - 22uF
			16	10uF - 22uF
		3216 (1206)	4	100uF - 100uF
			6.3	47uF - 47uF
		3225 (1210)	6.3	100uF - 100uF

Capacitance Table (X7R)

Category	TC	Size mm (inch)	Rated Voltage (Vdc)	Capacitance Range
High Level Ⅰ	X7R (125℃)	0603 (0201)	10	10nF - 10nF
			16	1nF - 10nF
			25	680pF - 1nF
		1005 (0402)	6.3	220nF - 1uF
			10	27nF - 220F
			16	1nF - 220nF
			25	1nF - 220nF
			50	220pF - 100nF
		1608 (0603)	10	220nF - 1uF
			16	100nF - 1uF
			25	39nF - 1uF
			50	100pF - 220nF
			100	1nF - 100nF
		2012 (0805)	6.3	10uF - 10uF
			10	2.2uF - 10uF
			16	2.2uF - 4.7uF
			25	100nF - 2.2uF
			50	1nF - 2.2uF
			100	10nF - 10nF

Normal Capacitors_High Level Ⅰ

Xin Yong Li

Capacitance Table (X7R)

Category	TC	Size mm (inch)	Rated Voltage (Vdc)	Capacitance Range
High Level Ⅰ	X7R (125℃)	3216 (1206)	6.3	22uF - 22uF
			10	22uF - 22uF
			16	1uF - 2.2uF
			25	1uF - 2.2uF
			50	100nF - 2.2uF
			100	2.2uF - 2.2uF
			630	10nF - 10nF
		3225 (1210)	25	10uF - 10uF
			50	4.7uF - 10uF
			100	4.7uF - 4.7uF
			630	47nF - 47nF
			1000	22nF - 22nF

Capacitance Table (X7S)

Category	TC	Size mm (inch)	Rated Voltage (Vdc)	Capacitance Range
High Level Ⅰ	X7S (125℃)	3225 (1210)	6.3	100uF - 100uF
			25	22uF - 22uF

Normal Capacitors_High Level Ⅰ

Xin Yong Li

Product Line Up (C0G)

Size : 0.60 × 0.30mm (inch : 0201)

No.	Thickness Max. (mm)	Rated Voltage (Vdc)	TC code	Capacitance	Capacitance Tolerance	Part Number
1	0.33	25	C0G	10pF	±5%	CL03C100JA3NNW#
2	0.33	25	C0G	33pF	±5%	CL03C330JA3NNW#
3	0.33	25	C0G	100pF	±5%	CL03C101JA3NNW#
4	0.33	50	C0G	33pF	±5%	CL03C330JB3NNW#
5	0.33	50	C0G	47pF	±5%	CL03C470JB3NNW#

Size : 1.00 × 0.50mm (inch : 0402)

No.	Thickness Max. (mm)	Rated Voltage (Vdc)	TC code	Capacitance	Capacitance Tolerance	Part Number
1	0.55	50	C0G	0.5pF	±0.25pF	CL05C0R5CB5NNW#
2	0.55	50	C0G	0.75pF	±0.25pF	CL05CR75CB5NNW#
3	0.55	50	C0G	1.3pF	±0.25pF	CL05C1R3CB5NNW#
4	0.55	50	C0G	2pF	±0.25pF	CL05C020CB5NNW#
5	0.55	50	C0G	2.2pF	±0.25pF	CL05C2R2CB5NNW#
6	0.55	50	C0G	2.4pF	±0.10pF	CL05C2R4BB5NNW#
7	0.55	50	C0G	4pF	±0.25pF	CL05C040CB5NNW#
8	0.55	50	C0G	4.3pF	±0.25pF	CL05C4R3CB5NNW#
9	0.55	50	C0G	4.7pF	±0.25pF	CL05C4R7CB5NNW#
10	0.55	50	C0G	5.6pF	±0.25pF	CL05C5R6CB5NNW#
11	0.55	50	C0G	8.2pF	±0.25pF	CL05C8R2CB5NNW#
12	0.55	50	C0G	9pF	±0.25pF	CL05C090CB5NNW#
13	0.55	50	C0G	10pF	±5%	CL05C100JB5NNW#
14	0.55	50	C0G	12pF	±0.25pF	CL05C120CB5NNW#
15	0.55	50	C0G	15pF	±0.25pF	CL05C150CB5NNW#
16	0.55	50	C0G	15pF	±5%	CL05C150JB5NNW#
17	0.55	50	C0G	18pF	±1pF	CL05C180FB5NNW#
18	0.55	50	C0G	20pF	±5%	CL05C200JB5NNW#
19	0.55	50	C0G	22pF	±5%	CL05C220JB5NNW#
20	0.55	50	C0G	24pF	±5%	CL05C240JB5NNW#
21	0.55	50	C0G	27pF	±5%	CL05C270JB5NNW#
22	0.55	50	C0G	33pF	±5%	CL05C330JB5NNW#
23	0.55	50	C0G	39pF	±5%	CL05C390JB5NNW#
24	0.55	50	C0G	47pF	±1pF	CL05C470FB5NNW#
25	0.55	50	C0G	47pF	±5%	CL05C470JB5NNW#
26	0.55	50	C0G	56pF	±5%	CL05C560JB5NNW#
27	0.55	50	C0G	68pF	±5%	CL05C680JB5NNW#
28	0.55	50	C0G	82pF	±5%	CL05C820JB5NNW#
29	0.55	50	C0G	100pF	±5%	CL05C101JB5NNW#
30	0.55	50	C0G	150pF	±5%	CL05C151JB5NNW#
31	0.55	50	C0G	180pF	±5%	CL05C181JB5NNW#
32	0.55	50	C0G	220pF	±5%	CL05C221JB5NNW#
33	0.55	50	C0G	270pF	±5%	CL05C271JB5NNW#
34	0.55	50	C0G	330pF	±5%	CL05C331JB5NNW#
35	0.55	50	C0G	390pF	±5%	CL05C391JB5NNW#
36	0.55	50	C0G	470pF	±5%	CL05C471JB5NNW#
37	0.55	50	C0G	560pF	±5%	CL05C561JB5NNW#
38	0.55	50	C0G	680pF	±5%	CL05C681JB5NNW#
39	0.55	50	C0G	820pF	±5%	CL05C821JB5NNW#
40	0.55	50	C0G	1nF	±5%	CL05C102JB5NNW#

Normal Capacitors_High Level Ⅰ

Xin Yong Li

Size : 1.60 × 0.80mm (inch : 0603)

No.	Thickness Max. (mm)	Rated Voltage (Vdc)	TC code	Capacitance	Capacitance Tolerance	Part Number
1	0.90	50	C0G	680pF	±5%	CL10C681JA8NNW#
2	0.90	50	C0G	1.5nF	±2%	CL10C152GA8NNW#
3	0.90	50	C0G	1pF	±0.25pF	CL10C010CB8NNW#
4	0.90	50	C0G	1.8pF	±0.25pF	CL10C1R8CB8NNW#
5	0.90	50	C0G	2.2pF	±0.10pF	CL10C2R2BB8NNW#
6	0.90	50	C0G	2.2pF	±0.25pF	CL10C2R2CB8NNW#
7	0.90	50	C0G	3.3pF	±0.25pF	CL10C3R3CB8NNW#
8	0.90	50	C0G	3.9pF	±0.10pF	CL10C3R9BB8NNW#
9	0.90	50	C0G	3.9pF	±0.25pF	CL10C3R9CB8NNW#
10	0.90	50	C0G	4.7pF	±0.10pF	CL10C4R7BB8NNW#
11	0.90	50	C0G	4.7pF	±0.25pF	CL10C4R7CB8NNW#
12	0.90	50	C0G	5pF	±0.10pF	CL10C050BB8NNW#
13	0.90	50	C0G	5.6pF	±0.25pF	CL10C5R6CB8NNW#
14	0.90	50	C0G	6.2pF	±0.25pF	CL10C6R2CB8NNW#
15	0.90	50	C0G	6.8pF	±0.25pF	CL10C6R8CB8NNW#
16	0.90	50	C0G	6.8pF	±0.50pF	CL10C6R8DB8NNW#
17	0.90	50	C0G	8.2pF	±0.25pF	CL10C8R2CB8NNW#
18	0.90	50	C0G	10pF	±0.25pF	CL10C100CB8NNW#
19	0.90	50	C0G	10pF	±5%	CL10C100JB8NNW#
20	0.90	50	C0G	12pF	±5%	CL10C120JB8NNW#
21	0.90	50	C0G	15pF	±1pF	CL10C150FB8NNW#
22	0.90	50	C0G	15pF	±5%	CL10C150JB8NNW#
23	0.90	50	C0G	18pF	±5%	CL10C180JB8NNW#
24	0.90	50	C0G	22pF	±1pF	CL10C220FB8NNW#
25	0.90	50	C0G	22pF	±2%	CL10C220GB8NNW#
26	0.90	50	C0G	22pF	±5%	CL10C220JB8NNW#
27	0.90	50	C0G	27pF	±5%	CL10C270JB8NNW#
28	0.90	50	C0G	33pF	±5%	CL10C330JB8NNW#
29	0.90	50	C0G	39pF	±5%	CL10C390JB8NNW#
30	0.90	50	C0G	47pF	±5%	CL10C470JB8NNW#
31	0.90	50	C0G	47pF	±10%	CL10C470KB8NNW#
32	0.90	50	C0G	56pF	±5%	CL10C560JB8NNW#
33	0.90	50	C0G	68pF	±5%	CL10C680JB8NNW#
34	0.90	50	C0G	82pF	±5%	CL10C820JB8NNW#
35	0.90	50	C0G	100pF	±5%	CL10C101JB8NNW#
36	0.90	50	C0G	120pF	±5%	CL10C121JB8NNW#
37	0.90	50	C0G	200pF	±5%	CL10C201JB8NNW#
38	0.90	50	C0G	220pF	±5%	CL10C221JB8NNW#
39	0.90	50	C0G	330pF	±5%	CL10C331JB8NNW#
40	0.90	50	C0G	470pF	±5%	CL10C471JB8NNW#
41	0.90	50	C0G	1nF	±5%	CL10C102JB8NNW#
42	0.90	50	C0G	1.2nF	±5%	CL10C122JB8NNW#
43	0.90	50	C0G	1.5nF	±5%	CL10C152JB8NNW#
44	0.90	50	C0G	2.2nF	±5%	CL10C222JB8NNW#
45	0.90	100	C0G	10pF	±5%	CL10C100JC8NNW#
46	0.90	100	C0G	33pF	±5%	CL10C330JC8NNW#
47	0.90	100	C0G	100pF	±5%	CL10C101JC8NNW#
48	0.90	100	C0G	150pF	±5%	CL10C151JC8NNW#
49	0.90	100	C0G	220pF	±5%	CL10C221JC8NNW#
50	0.90	100	C0G	270pF	±5%	CL10C271JC8NNW#
51	0.90	100	C0G	330pF	±5%	CL10C331JC8NNW#

Normal Capacitors_High Level Ⅰ

Xin Yong Li

Size : 2.00 × 1.25mm (inch : 0805)

No.	Thickness Max. (mm)	Rated Voltage (Vdc)	TC code	Capacitance	Capacitance Tolerance	Part Number
1	0.75	50	C0G	33pF	±5%	CL21C330JBANNW#
2	0.75	50	C0G	100pF	±2%	CL21C101GBANNW#
3	0.75	50	C0G	100pF	±5%	CL21C101JBANNW#
4	0.75	50	C0G	220pF	±5%	CL21C221JBANNW#
5	0.95	50	C0G	680pF	±5%	CL21C681JBCNNW#
6	0.95	50	C0G	1nF	±5%	CL21C102JBCNNW#
7	1.35	50	C0G	2.2nF	±5%	CL21C222JBFNNW#
8	1.35	50	C0G	2.7nF	±5%	CL21C272JBFNNW#
9	1.35	50	C0G	4.7nF	±5%	CL21C472JBFNNW#
10	1.35	50	C0G	10nF	±5%	CL21C103JBFNNW#
11	0.75	100	C0G	330pF	±5%	CL21C331JCANNW#
12	0.95	100	C0G	470pF	±5%	CL21C471JCCNNW#
13	1.35	100	C0G	1nF	±5%	CL21C102JCFNNW#
14	0.95	200	C0G	220pF	±5%	CL21C221JDCNNW#
15	0.95	250	C0G	10pF	±5%	CL21C100JECNNW#

Size : 3.20 × 1.60mm (inch : 1206)

No.	Thickness Max. (mm)	Rated Voltage (Vdc)	TC code	Capacitance	Capacitance Tolerance	Part Number
1	1.40	25	C0G	10nF	±2%	CL31C103GAFNNW#
2	1.00	50	C0G	1.5nF	±2%	CL31C152GBCNNW#
3	1.40	50	C0G	3.3nF	±5%	CL31C332JBFNNW#
4	1.80	50	C0G	27nF	±5%	CL31C273JBHNNW#
5	1.80	50	C0G	33nF	±5%	CL31C333JBHNNW#
6	1.00	100	C0G	1nF	±10%	CL31C102KCCNNW#
7	1.40	500	C0G	10pF	±5%	CL31C100JGFNNW#
8	1.40	500	C0G	39pF	±5%	CL31C390JGFNNW#
9	1.40	630	C0G	220pF	±5%	CL31C221JHFNNW#

Size : 3.20 × 2.50mm (inch : 1210)

No.	Thickness Max. (mm)	Rated Voltage (Vdc)	TC code	Capacitance	Capacitance Tolerance	Part Number
1	2.70	100	C0G	47nF	±5%	CL32C473JCJNNW#

Normal Capacitors_High Level Ⅰ

Xin Yong Li

Product Line Up (X5R)

Size : 0.60 × 0.30mm (inch : 0201)

No.	Thickness Max. (mm)	Rated Voltage (Vdc)	TC code	Capacitance	Capacitance Tolerance	Part Number
1	0.33	6.3	X5R	10nF	±10%	CL03A103KQ3NNW#
2	0.33	6.3	X5R	100nF	±10%	CL03A104KQ3N3W#
3	0.33	6.3	X5R	100nF	±10%	CL03A104KQ3NNW#
4	0.33	6.3	X5R	470nF	±20%	CL03A474MQ3NNW#
5	0.33	10	X5R	2.2nF	±10%	CL03A222KP3NNW#
6	0.33	10	X5R	4.7nF	±10%	CL03A472KP3NNW#
7	0.33	10	X5R	10nF	±10%	CL03A103KP3NNW#
8	0.33	10	X5R	100nF	±10%	CL03A104KP3NNW#

Size : 1.00 × 0.50mm (inch : 0402)

No.	Thickness Max. (mm)	Rated Voltage (Vdc)	TC code	Capacitance	Capacitance Tolerance	Part Number
1	0.55	4	X5R	2.2uF	±20%	CL05A225MR5NNW#
2	0.65	4	X5R	4.7uF	±20%	CL05A475MR5NRW#
3	0.55	6.3	X5R	220nF	±10%	CL05A224KQ5NNW#
4	0.55	6.3	X5R	470nF	±10%	CL05A474KQ5NNW#
5	0.55	6.3	X5R	1uF	±10%	CL05A105KQ5NNW#
6	0.55	6.3	X5R	1uF	±20%	CL05A105MQ5NNW#
7	0.55	6.3	X5R	2.2uF	±20%	CL05A225MQ5NNW#
8	0.65	6.3	X5R	4.7uF	±20%	CL05A475MQ5NRW#
9	0.55	10	X5R	100nF	±10%	CL05A104KP5NNW#
10	0.55	10	X5R	220nF	±10%	CL05A224KP5NNW#
11	0.55	10	X5R	1uF	±10%	CL05A105KP5NNW#
12	0.6	10	X5R	1uF	±10%	CL05A105KP5NQW#
13	0.55	16	X5R	100nF	±10%	CL05A104KO5NNW#
14	0.55	16	X5R	220nF	±10%	CL05A224KO5NNW#
15	0.55	16	X5R	1uF	±10%	CL05A105KO5NNW#
16	0.60	16	X5R	1uF	±10%	CL05A105KO5NQW#
17	0.60	16	X5R	1uF	±20%	CL05A105MO5NQW#
18	0.55	25	X5R	100nF	±10%	CL05A104KA5NNW#
19	0.55	25	X5R	470nF	±10%	CL05A474KA5NNW#
20	0.60	25	X5R	1uF	±10%	CL05A105KA5NQW#

Normal Capacitors_High Level Ⅰ

Xin Yong Li

Size : 1.60 × 0.80mm (inch : 0603)

No.	Thickness Max. (mm)	Rated Voltage (Vdc)	TC code	Capacitance	Capacitance Tolerance	Part Number
1	0.90	4	X5R	10uF	±20%	CL10A106MR8NNW#
2	0.95	4	X5R	22uF	±20%	CL10A226MR8NQW#
3	1.05	4	X5R	22uF	±20%	CL10A226MR8NUW#
4	1.00	4	X5R	47uF	±20%	CL10A476MR8NRW#
5	0.90	6.3	X5R	2.2uF	±10%	CL10A225KQ8NNW#
6	0.90	6.3	X5R	4.7uF	±10%	CL10A475KQ8NNW#
7	0.90	6.3	X5R	4.7uF	±20%	CL10A475MQ8NNW#
8	0.95	6.3	X5R	4.7uF	±20%	CL10A475MQ8NQW#
9	0.90	6.3	X5R	10uF	±10%	CL10A106KQ8NNW#
10	0.90	6.3	X5R	10uF	±20%	CL10A106MQ8NNW#
11	0.90	10	X5R	470nF	±10%	CL10A474KP8NNW#
12	0.90	10	X5R	1uF	±10%	CL10A105KP8NNW#
13	0.90	10	X5R	2.2uF	±10%	CL10A225KP8NNW#
14	0.90	10	X5R	4.7uF	±10%	CL10A475KP8NNW#
15	0.90	16	X5R	1uF	±10%	CL10A105KO8NNW#
16	0.90	16	X5R	2.2uF	±10%	CL10A225KO8NNW#
17	0.90	25	X5R	220nF	±10%	CL10A224KA8NNW#
18	0.90	25	X5R	470nF	±10%	CL10A474KA8NNW#
19	0.90	25	X5R	1uF	±10%	CL10A105KA8NNW#

Size : 2.00 × 1.25mm (inch : 0805)

No.	Thickness Max. (mm)	Rated Voltage (Vdc)	TC code	Capacitance	Capacitance Tolerance	Part Number
1	1.45	4	X5R	47uF	±20%	CL21A476MRYNNW#
2	1.35	6.3	X5R	4.7uF	±10%	CL21A475KQFNNW#
3	1.35	6.3	X5R	4.7uF	±20%	CL21A475MQFNNW#
4	1.35	6.3	X5R	10uF	±10%	CL21A106KQFNNW#
5	1.40	6.3	X5R	22uF	±20%	CL21A226MQQNNW#
6	1.45	6.3	X5R	22uF	±20%	CL21A226MQYNNW#
7	1.45	6.3	X5R	47uF	±20%	CL21A476MQYNNW#
8	1.35	10	X5R	2.2uF	±10%	CL21A225KPFNNW#
9	1.35	10	X5R	4.7uF	±10%	CL21A475KPFNNW#
10	1.35	10	X5R	10uF	±10%	CL21A106KPFNNW#
11	1.35	10	X5R	10uF	±20%	CL21A106MPFNNW#
12	1.40	10	X5R	10uF	±20%	CL21A106MPQNNW#
13	1.45	10	X5R	22uF	±20%	CL21A226MPYNNW#
14	1.35	16	X5R	10uF	±10%	CL21A106KOFNNW#
15	1.40	16	X5R	10uF	±10%	CL21A106KOQNNW#
16	1.45	16	X5R	22uF	±20%	CL21A226MOYNNW#
17	1.35	25	X5R	2.2uF	±10%	CL21A225KAFNNW#
18	1.35	25	X5R	4.7uF	±10%	CL21A475KAFNNW#
19	1.40	25	X5R	4.7uF	±10%	CL21A475KAQNNW#
20	1.45	25	X5R	22uF	±20%	CL21A226MAYNNW#

Normal Capacitors_High Level Ⅰ

Xin Yong Li

Size : 3.20 × 1.60mm (inch : 1206)

No.	Thickness Max. (mm)	Rated Voltage (Vdc)	TC code	Capacitance	Capacitance Tolerance	Part Number
1	1.80	6.3	X5R	22uF	±10%	CL31A226KQHNNW#
2	1.80	6.3	X5R	47uF	±20%	CL31A476MQHNNW#
3	1.90	6.3	X5R	100uF	±20%	CL31A107MQKNNW#
4	1.80	10	X5R	22uF	±10%	CL31A226KPHNNW#
5	1.80	10	X5R	22uF	±20%	CL31A226MPHNNW#
6	1.80	10	X5R	47uF	±20%	CL31A476MPHNNW#
7	1.80	16	X5R	22uF	±10%	CL31A226KOHNNW#
8	1.80	16	X5R	22uF	±20%	CL31A226MOHNNW#
9	1.80	25	X5R	4.7uF	±10%	CL31A475KAHNNW#
10	1.80	25	X5R	10uF	±10%	CL31A106KAHNNW#
11	1.80	25	X5R	10uF	±20%	CL31A106MAHNNW#
12	1.80	25	X5R	22uF	±10%	CL31A226KAHNNW#

Size : 3.20 × 2.50mm (inch : 1210)

No.	Thickness Max. (mm)	Rated Voltage (Vdc)	TC code	Capacitance	Capacitance Tolerance	Part Number
1	2.70	6.3	X5R	22uF	±10%	CL32A226KQJNNW#
2	2.70	6.3	X5R	22uF	±20%	CL32A226MQJNNW#
3	2.80	6.3	X5R	100uF	±20%	CL32A107MQVNNW#
4	2.70	10	X5R	22uF	±20%	CL32A226MPJNNW#
5	2.70	16	X5R	22uF	±10%	CL32A226KOJNNW#
6	2.70	16	X5R	47uF	±10%	CL32A476KOJNNW#
7	2.70	16	X5R	47uF	±20%	CL32A476MOJNNW#
8	2.70	25	X5R	22uF	±10%	CL32A226KAJNNW#
9	2.70	25	X5R	22uF	±20%	CL32A226MAJNNW#

Normal Capacitors_High Level Ⅰ

Xin Yong Li

Product Line Up (X6S)

Size : 0.60 × 0.30mm (inch : 0201), 1.00 × 0.50mm (inch : 0402)

No.	Thickness Max. (mm)	Rated Voltage (Vdc)	TC code	Capacitance	Capacitance Tolerance	Part Number
1	0.33	6.3	X6S	100nF	±10%	CL03X104KQ3NNW#
2	0.33	16	X6S	100nF	±10%	CL03X104KO3NNW#
3	0.55	6.3	X6S	470nF	±10%	CL05X474KQ5NNW#
4	0.55	6.3	X6S	1uF	±10%	CL05X105KQ5NNW#
5	0.60	6.3	X6S	1uF	±10%	CL05X105KQ5NQW#
6	0.55	10	X6S	1uF	±10%	CL05X105KP5NNW#
7	0.70	10	X6S	2.2uF	±10%	CL05X225KP5QUW#
8	0.60	25	X6S	1uF	±10%	CL05X105KA5NQW#

Size : 1.60 × 0.80mm (inch : 0603)

No.	Thickness Max. (mm)	Rated Voltage (Vdc)	TC code	Capacitance	Capacitance Tolerance	Part Number
1	1.00	2.5	X6S	47uF	±20%	CL10X476MS8NRW#
2	0.90	4	X6S	4.7uF	±10%	CL10X475KR8NNW#
3	1.00	4	X6S	22uF	±20%	CL10X226MR8QRW#
4	1.05	4	X6S	22uF	±20%	CL10X226MR8NUW#
5	1.00	4	X6S	47uF	±20%	CL10X476MR8NRW#
6	0.90	6.3	X6S	4.7uF	±20%	CL10X475MQ8NNW#
7	0.95	6.3	X6S	4.7uF	±20%	CL10X475MQ8NQW#
8	1.00	6.3	X6S	4.7uF	±10%	CL10X475KQ8NRW#
9	1.00	6.3	X6S	4.7uF	±20%	CL10X475MQ8NRW#
10	0.90	6.3	X6S	10uF	±20%	CL10X106MQ8NNW#
11	1.00	6.3	X6S	22uF	±20%	CL10X226MQ8QRW#
12	1.00	10	X6S	10uF	±20%	CL10X106MP8NRW#
13	1.00	16	X6S	4.7uF	±10%	CL10X475KO8NRW#

Size : 2.00 × 1.25mm (inch : 0805)

No.	Thickness Max. (mm)	Rated Voltage (Vdc)	TC code	Capacitance	Capacitance Tolerance	Part Number
1	1.40	4	X6S	22uF	±20%	CL21X226MRQNNW#
2	1.45	4	X6S	22uF	±20%	CL21X226MRYNNW#
3	1.45	4	X6S	47uF	±20%	CL21X476MRYNNW#
4	1.40	6.3	X6S	10uF	±10%	CL21X106KQQNNW#
5	1.40	6.3	X6S	22uF	±20%	CL21X226MQQNNW#
6	1.45	6.3	X6S	22uF	±20%	CL21X226MQYNNW#
7	1.45	10	X6S	22uF	±20%	CL21X226MPYNNW#
8	1.40	16	X6S	10uF	±10%	CL21X106KOQNNW#
9	1.45	16	X6S	22uF	±20%	CL21X226MOYNNW#

Size : 3.20 × 1.60mm (inch : 1206), 3.20 × 2.50mm (inch : 1210)

No.	Thickness Max. (mm)	Rated Voltage (Vdc)	TC code	Capacitance	Capacitance Tolerance	Part Number
1	1.90	4Vdc	X6S	100uF	±20%	CL31X107MRKNNW#
2	1.80	6.3Vdc	X6S	47uF	±20%	CL31X476MQHNNW#
3	2.70	6.3Vdc	X6S	100uF	±20%	CL32X107MQVNNW#

Normal Capacitors_High Level Ⅰ

Xin Yong Li

Product Line Up (X7R)

Size : 0.60 × 0.30mm (inch : 0201)

No.	Thickness Max. (mm)	Rated Voltage (Vdc)	TC code	Capacitance	Capacitance Tolerance	Part Number
1	0.33	10	X7R	10nF	±10%	CL03B103KP3NNW#
2	0.33	16	X7R	1nF	±10%	CL03B102KO3NNW#
3	0.33	16	X7R	10nF	±10%	CL03B103KO3NNW#
4	0.33	25	X7R	680pF	±10%	CL03B681KA3NNW#
5	0.33	25	X7R	1nF	±10%	CL03B102KA3NNW#

Size : 1.00 × 0.50mm (inch : 0402)

No.	Thickness Max. (mm)	Rated Voltage (Vdc)	TC code	Capacitance	Capacitance Tolerance	Part Number
1	0.55	6.3	X7R	220nF	±10%	CL05B224KQ5NNW#
2	0.55	6.3	X7R	1uF	±10%	CL05B105KQ5QNW#
3	0.55	10	X7R	27nF	±10%	CL05B273KP5NNW#
4	0.55	10	X7R	33nF	±10%	CL05B333KP5NNW#
5	0.55	10	X7R	47nF	±10%	CL05B473KP5NNW#
6	0.55	10	X7R	100nF	±10%	CL05B104KP5NNW#
7	0.55	10	X7R	220nF	±10%	CL05B224KP5NNW#
8	0.55	10	X7R	1nF	±10%	CL05B102KO5NNW#
9	0.55	16	X7R	10nF	±5%	CL05B103JO5NNW#
10	0.55	16	X7R	10nF	±10%	CL05B103KO5NNW#
11	0.55	16	X7R	10nF	±20%	CL05B103MO5NNW#
12	0.55	16	X7R	15nF	±10%	CL05B153KO5NNW#
13	0.55	16	X7R	22nF	±10%	CL05B223KO5NNW#
14	0.55	16	X7R	33nF	±10%	CL05B333KO5NNW#
15	0.55	16	X7R	47nF	±10%	CL05B473KO5NNW#
16	0.55	16	X7R	68nF	±10%	CL05B683KO5NNW#
17	0.55	16	X7R	82nF	±10%	CL05B823KO5NNW#
18	0.55	16	X7R	100nF	±10%	CL05B104KO5NNW#
19	0.55	16	X7R	220nF	±10%	CL05B224KO5NNW#
20	0.55	25	X7R	1nF	±10%	CL05B102KA5NNW#
21	0.55	25	X7R	5.6nF	±10%	CL05B562KA5NNW#
22	0.55	25	X7R	6.8nF	±10%	CL05B682KA5NNW#
23	0.55	25	X7R	10nF	±5%	CL05B103JA5NNW#
24	0.55	25	X7R	10nF	±10%	CL05B103KA5NNW#
25	0.55	25	X7R	15nF	±10%	CL05B153KA5NNW#
26	0.55	25	X7R	22nF	±10%	CL05B223KA5NNW#
27	0.55	25	X7R	33nF	±10%	CL05B333KA5NNW#
28	0.55	25	X7R	47nF	±10%	CL05B473KA5NNW#
29	0.55	25	X7R	100nF	±10%	CL05B104KA5NNW#
30	0.55	25	X7R	220nF	±10%	CL05B224KA5NNW#
31	0.55	50	X7R	220pF	±10%	CL05B221KB5NNW#
32	0.55	50	X7R	270pF	±10%	CL05B271KB5NNW#
33	0.55	50	X7R	330pF	±10%	CL05B331KB5NNW#
34	0.55	50	X7R	390pF	±10%	CL05B391KB5NNW#
35	0.55	50	X7R	470pF	±10%	CL05B471KB5NNW#
36	0.55	50	X7R	560pF	±10%	CL05B561KB5NNW#
37	0.55	50	X7R	680pF	±10%	CL05B681KB5NNW#
38	0.55	50	X7R	1nF	±5%	CL05B102JB5NNW#

Normal Capacitors_High Level Ⅰ

Xin Yong Li

Size : 1.00 × 0.50mm (inch : 0402)

No.	Thickness Max. (mm)	Rated Voltage (Vdc)	TC code	Capacitance	Capacitance Tolerance	Part Number
39	0.55	50	X7R	1nF	±10%	CL05B102KB5NNW#
40	0.55	50	X7R	1.5nF	±10%	CL05B152KB5NNW#
41	0.55	50	X7R	1.8nF	±10%	CL05B182KB5NNW#
42	0.55	50	X7R	2.2nF	±10%	CL05B222KB5NNW#
43	0.55	50	X7R	2.7nF	±10%	CL05B272KB5NNW#
44	0.55	50	X7R	3.3nF	±10%	CL05B332KB5NNW#
45	0.55	50	X7R	3.9nF	±10%	CL05B392KB5NNW#
46	0.55	50	X7R	4.7nF	±10%	CL05B472KB5NNW#
47	0.55	50	X7R	8.2nF	±10%	CL05B822KB5NNW#
48	0.55	50	X7R	10nF	±10%	CL05B103KB5NNW#
49	0.55	50	X7R	22nF	±10%	CL05B223KB5NNW#
50	0.55	50	X7R	100nF	±10%	CL05B104KB5NNW#

Size : 1.60 × 0.80mm (inch : 0603)

No.	Thickness Max. (mm)	Rated Voltage (Vdc)	TC code	Capacitance	Capacitance Tolerance	Part Number
1	0.90	10	X7R	220nF	±10%	CL10B224KP8NNW#
2	0.90	10	X7R	1uF	±10%	CL10B105KP8NNW#
3	0.90	16	X7R	100nF	±10%	CL10B104KO8NNW#
4	0.90	16	X7R	150nF	±10%	CL10B154KO8NNW#
5	0.90	16	X7R	220nF	±10%	CL10B224KO8NNW#
6	0.90	16	X7R	470nF	±10%	CL10B474KO8NNW#
7	0.90	16	X7R	1uF	±10%	CL10B105KO8NNW#
8	0.90	25	X7R	39nF	±10%	CL10B393KA8NNW#
9	0.90	25	X7R	47nF	±10%	CL10B473KA8NNW#
10	0.90	25	X7R	100nF	±10%	CL10B104KA8NNW#
11	0.90	25	X7R	100nF	±20%	CL10B104MA8NNW#
12	0.90	25	X7R	1uF	±10%	CL10B105KA8NNW#
13	0.90	50	X7R	100pF	±10%	CL10B101KB8NNW#
14	0.90	50	X7R	680pF	±10%	CL10B681KB8NNW#
15	0.90	50	X7R	1nF	±10%	CL10B102KB8NNW#
16	0.90	50	X7R	1.5nF	±10%	CL10B152KB8NNW#
17	0.90	50	X7R	2.2nF	±5%	CL10B222JB8NNW#
18	0.90	50	X7R	2.2nF	±10%	CL10B222KB8NNW#
19	0.90	50	X7R	3.3nF	±10%	CL10B332KB8NNW#
20	0.90	50	X7R	4.7nF	±10%	CL10B472KB8NNW#
21	0.90	50	X7R	6.8nF	±10%	CL10B682KB8NNW#
22	0.90	50	X7R	10nF	±5%	CL10B103JB8NNW#
23	0.90	50	X7R	10nF	±10%	CL10B103KB8NNW#
24	0.90	50	X7R	22nF	±10%	CL10B223KB8NNW#
25	0.90	50	X7R	27nF	±10%	CL10B273KB8NNW#
26	0.90	50	X7R	47nF	±10%	CL10B473KB8NNW#
27	0.90	50	X7R	100nF	±5%	CL10B104JB8NNW#
28	0.90	50	X7R	100nF	±10%	CL10B104KB8NNW#
29	0.90	50	X7R	220nF	±10%	CL10B224KB8NNW#
30	0.90	100	X7R	1nF	±10%	CL10B102KC8NNW#
31	0.90	100	X7R	10nF	±10%	CL10B103KC8NNW#
32	0.90	100	X7R	100nF	±10%	CL10B104KC8N3W#

Normal Capacitors_High Level Ⅰ

Xin Yong Li

Size : 2.00 × 1.25mm (inch : 0805)

No.	Thickness Max. (mm)	Rated Voltage (Vdc)	TC code	Capacitance	Capacitance Tolerance	Part Number
1	1.40	6.3	X7R	10uF	±10%	CL21B106KQQNNW#
2	1.35	10	X7R	2.2uF	±10%	CL21B225KPFNNW#
3	1.40	10	X7R	10uF	±10%	CL21B106KPQNNW#
4	1.35	16	X7R	2.2uF	±10%	CL21B225KOFNNW#
5	1.35	16	X7R	4.7uF	±10%	CL21B475KOFNNW#
6	0.95	25	X7R	100nF	±10%	CL21B104KACNNW#
7	1.35	25	X7R	2.2uF	±10%	CL21B225KAFNNW#
8	0.75	50	X7R	1nF	±10%	CL21B102KBANNW#
9	0.75	50	X7R	10nF	±10%	CL21B103KBANNW#
10	0.75	50	X7R	15nF	±10%	CL21B153KBANNW#
11	0.75	50	X7R	22nF	±10%	CL21B223KBANNW#
12	0.95	50	X7R	100nF	±10%	CL21B104KBCNNW#
13	1.45	50	X7R	2.2uF	±10%	CL21B225KBYNNW#
14	0.75	100	X7R	10nF	±10%	CL21B103KCANNW#

Size : 3.20 × 1.60mm (inch : 1206)

No.	Thickness Max. (mm)	Rated Voltage (Vdc)	TC code	Capacitance	Capacitance Tolerance	Part Number
1	1.80	6.3	X7R	22uF	±10%	CL31B226KQHNNW#
2	1.80	10	X7R	22uF	±10%	CL31B226KPHNNW#
3	1.40	16	X7R	1uF	±10%	CL31B105KOFNNW#
4	1.80	16	X7R	2.2uF	±10%	CL31B225KOHNNW#
5	1.80	25	X7R	1uF	±10%	CL31B105KAHNNW#
6	1.80	25	X7R	1uF	±20%	CL31B105MAHNNW#
7	1.80	25	X7R	2.2uF	±10%	CL31B225KAHNNW#
8	1.00	50	X7R	100nF	±10%	CL31B104KBCNNW#
9	1.40	50	X7R	330nF	±10%	CL31B334KBFNNW#
10	1.80	50	X7R	470nF	±10%	CL31B474KBHNNW#
11	1.80	50	X7R	1uF	±10%	CL31B105KBHNNW#
12	1.80	50	X7R	2.2uF	±10%	CL31B225KBHNNW#
13	1.80	100	X7R	2.2uF	±10%	CL31B225KCHZNW#
14	1.40	630	X7R	10nF	±10%	CL31B103KHFNNW#

Size : 3.20 × 2.50mm (inch : 1210)

No.	Thickness Max. (mm)	Rated Voltage (Vdc)	TC code	Capacitance	Capacitance Tolerance	Part Number
1	2.00	25	X7R	10uF	±10%	CL32B106KAULNW#
2	2.70	50	X7R	4.7uF	±10%	CL32B475KBJNNW#
3	2.80	50	X7R	10uF	±10%	CL32B106KBVZNW#
4	2.20	100	X7R	4.7uF	±10%	CL32B475KCIZNW#
5	2.20	630	X7R	47nF	±10%	CL32B473KHINNW#
6	2.20	1000	X7R	22nF	±10%	CL32B223KIIZNW#
7	2.80	6.3	X7S	100uF	±20%	CL32Y107MQVNNW#
8	2.80	25	X7S	22uF	±10%	CL32Y226KAVZNW#

Normal Capacitors_High Level Ⅱ

Normal High Level Ⅱ

Xin Yong Li

Features

- A High Level Ⅱ MLCC is a chip-type capacitor designed to be suitable for outdoor industrial applications.
- Reliability for moisture resistance and temperature change has been strengthened, and the bending strength characteristic is excellent.

1. Ceramic Body
2. Electrode (Ni/Cu*)
3. Plating (Ni)
4. Termination (Cu or Cu+Metal Epoxy)
5. Plating (Sn)

High Level Ⅰ	Improved Reliability (65℃, 90%RH, 1Vr, 500H)
High Level Ⅱ	Reinforced Reliability (85℃, 85%RH, 1Vr, 1000H)

* Internal Cu electrode is only applied to limited products.

Application

- Base station, Solar Inverter, DC-DC Converter

Structure and Dimensions

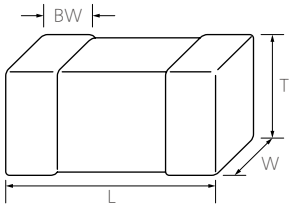

Size Code	Dimension (mm)				EIA (inch)
	L	W	T	BW	
05	1.00±0.05	0.50±0.05	0.50±0.05	0.25±0.10	0402
10	1.60±0.10	0.80±0.10	0.80±0.10	0.30±0.20	0603
21	2.00±0.10	1.25±0.10	1.25±0.10	0.5+0.2/-0.3	0805

Normal Capacitors_High Level II

Xin Yong Li

Capacitance Table (C0G)

Category	TC	Size mm (inch)	Rated Voltage (Vdc)	Capacitance	Capacitance Range
				pF (0.1, 1, 10, 100) / nF (1, 10, 100) / uF (1, 10, 100)	
High Level II	C0G (125℃)	1005 (0402)	50		5.6pF - 5.6pF

Capacitance Table (X7R)

Category	TC	Size mm (inch)	Rated Voltage (Vdc)	Capacitance	Capacitance Range
				pF (0.1, 1, 10, 100) / nF (1, 10, 100) / uF (1, 10, 100)	
High Level II	X7R (125℃)	1608 (0603)	25		1uF - 1uF
			50		220nF - 470nF
		2012 (0805)	25		2.2uF - 2.2uF
			50		1uF - 1uF

Capacitance Table (X7S)

Category	TC	Size mm (inch)	Rated Voltage (Vdc)	Capacitance	Capacitance Range
				pF (0.1, 1, 10, 100) / nF (1, 10, 100) / uF (1, 10, 100)	
High Level II	X7S (125℃)	3225 (1210)	6.3		100uF - 100uF

Product Line Up (C0G)

Size : 1.00 × 0.50mm (inch:0402)

No.	Thickness Max. (mm)	Rated Voltage (Vdc)	TC code	Capacitance	Capacitance Tolerance	Part Number
1	0.55	50	C0G	5.6pF	±0.25pF	CL05C5R6CB5N4N#

Product Line Up (X7R)

Size : 1.60 × 0.80mm (inch : 0603), 2.00 × 1.25mm (inch : 0805)

No.	Thickness Max. (mm)	Rated Voltage (Vdc)	TC code	Capacitance	Capacitance Tolerance	Part Number
1	0.90	25	X7R	1uF	±10%	CL10B105KA8Z4J#
2	0.90	50	X7R	470nF	±10%	CL10B474KB8Z4J#
3	0.90	50	X7R	330nF	±10%	CL10B334KB8Z4J#
4	0.90	50	X7R	220nF	±10%	CL10B224KB8Z4J#
5	1.35	25	X7R	2.2uF	±10%	CL21B225KAFZ4J#
6	1.35	50	X7R	1uF	±10%	CL21B105KBFZ4J#
7	2.80	6.3	X7S	100uF	±20%	CL32Y107MQVN4N#

Embedded/LSC Capacitors

Embedded/LSC

Features

- This can be mounted between the solder balls to deal with thin devices or modules.
- It can reduce the thickness of the module or be embedded inside the board to secure the mounting area.
- It can quickly supply stable current to high-speed AP of mobile devices.
- In addition it helps remove high-frequency noise, suffering less from external environmental stress.

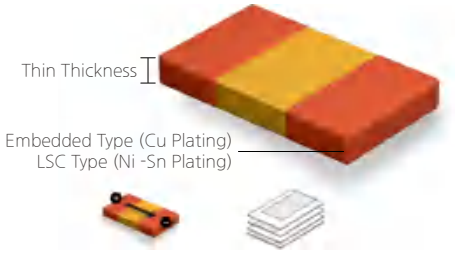

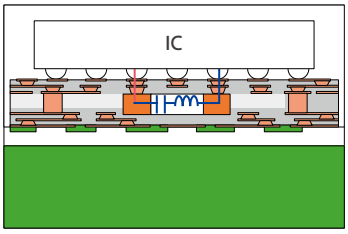

Embedded Capacitor
(In package PCB)

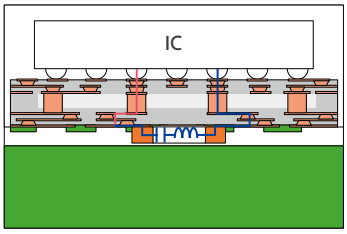

LSC

Application

- Smart Phone, Wearable Devices, IC Package, Module Products

Structure and Dimensions

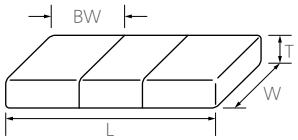

Size Code	Dimension (mm)					EIA (inch)
	L	W	T	Thkckness Code	BW	
02	0.40±0.02	0.20±0.02	0.095±0.015	L	0.10±0.03	01005
05	1.00±0.05	0.50±0.05	0.0975±0.0125	L	0.25±0.075	0402
L5	0.52±0.05	1.00±0.05	0.085±0.015	J	0.145±0.050	0204

Xin Yong Li

Embedded/LSC Capacitors

Xin Yong Li

Capacitance Table (X5R)

TC	Size mm (inch)	Rated Voltage (Vdc)	Capacitance											Capacitance Range
			pF				nF			uF				
			0.1	1	10	100	1	10	100	1	10	100		
X5R (85℃)	0402 (01005)	6.3												51pF - 6.8nF
	0510 (0204)	4												220nF - 220nF
	1005 (0402)	6.3												220nF - 220nF

Product Line Up (X5R)

Size : 0.40 × 0.20mm (inch : 01005)

No.	Thickness Max. (mm)	Rated Voltage (Vdc)	TC code	Capacitance	Capacitance Tolerance	Part Number
1	0.11	6.3	X5R	6.8nF	±20%	CL02A682MQLHNN#
2	0.11	6.3	X5R	1nF	±20%	CL02A102MQLHNN#
3	0.11	6.3	X5R	680pF	±20%	CL02A681MQLHNN#
4	0.11	6.3	X5R	51pF	±20%	CL02A510MQLHNN#

Size : 1.00 × 0.50mm (inch : 0402)

No.	Thickness Max. (mm)	Rated Voltage (Vdc)	TC code	Capacitance	Capacitance Tolerance	Part Number
1	0.10	4	X5R	220nF	±20%	CLL5A224MRJHLC#
2	0.10	6.3	X5R	220nF	±20%	CL05A224MQLHEC#

High Bending Strength Capacitors

High Bending Strength

Xin Yong Li

Features

- The thermal/mechanical stress on the chip can be reduced by the ductile characteristic of Soft Termination.
- It is also resistant to stress caused by board bending.

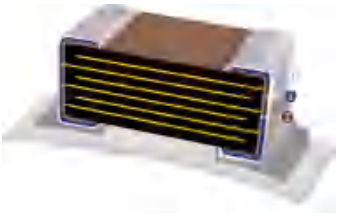

① Ni/Sn
② Metal/Epoxy Termination
③ Cu-Term

Application

- All Application (Smart Phone, PC, HDD/SSD Board, Tablet, Display, Etc), Power (SMPS, DC-DC Converter), Industrial Application

Structure and Dimensions

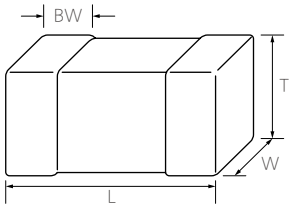

Size Code	Dimension (mm)					EIA (inch)
	L	W	T	Thkckness Code	BW	
03	0.60±0.03	0.30±0.03	0.30±0.03	3	0.15±0.05	0201
05	1.00±0.05	0.50±0.05	0.50±0.05	5	0.25±0.10	0402
10	1.60±0.10	0.80±0.10mm	0.80±0.10mm	8	0.30±0.20	0603
21	2.00±0.10mm	1.25±0.10mm	0.85±0.10mm	C	0.50+0.2/-0.3	0805
	2.00±0.10mm	1.25±0.10mm	1.25±0.10mm	F		
	2.00±0.15mm	1.25±0.15mm	1.25±0.15mm	Q		
31	3.20±0.15mm	1.60±0.15mm	1.25±0.15mm	F	0.50±0.30	1206
	3.20±0.20mm	1.60±0.20mm	1.60±0.20mm	H		
32	3.20±0.30mm	2.50±0.20mm	1.60±0.10mm	T	0.60±0.30	1210
	3.20±0.30mm	2.50±0.20mm	2.50±0.20mm	J		
	3.20±0.40mm	2.50±0.30mm	2.50±0.30mm	V		

High Bending Strength Capacitors

Xin Yong Li

Capacitance Table (X5R)

TC	Size mm (inch)	Rated Voltage (Vdc)	Capacitance Range
X5R (85℃)	0603 (0201)	10	100nF - 1uF
	1005 (0402)	10	2.2uF - 10uF
	1608 (0603)	6.3	10uF - 10uF

Capacitance Table (X7R)

TC	Size mm (inch)	Rated Voltage (Vdc)	Capacitance Range
X7R (125℃)	1608 (0603)	16	1uF - 1uF
		50	100nF - 100nF
	2012 (0805)	16	4.7uF - 4.7uF
		250	1nF - 1nF
	3216 (1206)	25	4.7uF - 10uF
		100	100nF - 1uF
		250	100nF - 100nF
		630	1nF - 10nF
	3225 (1210)	50	4.7uF - 10uF
		100	2.2uF - 4.7uF

Capacitance Table (X7S)

TC	Size mm (inch)	Rated Voltage (Vdc)	Capacitance Range
X7S (125℃)	2012 (0805)	100	220nF - 220nF
	3225 (1210)	100	4.7uF - 4.7uF

High Bending Strength Capacitors

Xin Yong Li

Product Line Up (X5R)

Size : 0.60 × 0.30mm (inch : 0201)

No.	Thickness Max. (mm)	Rated Voltage (Vdc)	TC code	Capacitance	Capacitance Tolerance	Part Number
1	0.35	10	X5R	1uF	±20%	CL03A105MP3ZSN#
2	0.33	10	X5R	100nF	±10%	CL03A104KP3ZNN#

Size : 1.00 × 0.50mm (inch : 0402)

No.	Thickness Max. (mm)	Rated Voltage (Vdc)	TC code	Capacitance	Capacitance Tolerance	Part Number
1	0.70	10	X5R	10uF	±20%	CL05A106MP5ZUN#
2	0.65	10	X5R	4.7uF	±10%	CL05A475KP5ZRN#
3	0.57	10	X5R	2.2uF	±10%	CL05A225KP5ZSN#
4	0.57	6.3	X5R	2.2uF	±20%	CL05A225MQ5ZSN#

Size : 1.60 × 0.80mm (inch : 0603)

No.	Thickness Max. (mm)	Rated Voltage (Vdc)	TC code	Capacitance	Capacitance Tolerance	Part Number
1	1.05	10	X5R	22uF	±20%	CL10A226MP8ZUN#
2	1.00	25	X5R	10uF	±20%	CL10A106MA8ZRN#
3	0.95	6.3	X5R	10uF	±20%	CL10A106MQ8ZQN#

Size : 3.20 × 2.50mm (inch : 1210)

No.	Thickness Max. (mm)	Rated Voltage (Vdc)	TC code	Capacitance	Capacitance Tolerance	Part Number
1	1.70	16	X5R	22uF	±10%	CL32A226KOTFNN#

High Bending Strength Capacitors

Xin Yong Li

Product Line Up (X7R)

Size : 1.60 × 0.80mm (inch : 0603)

No.	Thickness Max. (mm)	Rated Voltage (Vdc)	TC code	Capacitance	Capacitance Tolerance	Part Number
1	0.90	25	X7R	1uF	±10%	CL10B105KA8ZFN#
2	0.90	16	X7R	1uF	±10%	CL10B105KO8SFN#
3	0.90	16	X7R	1uF	±10%	CL10B105KO8ZFN#
4	0.90	16	X7R	1uF	±10%	CL10B105KO8ZW6#
5	0.90	16	X7R	220nF	±5%	CL10B224JO8SFN#
6	0.90	25	X7R	220nF	±10%	CL10B224KA8SFN#
7	0.90	50	X7R	220nF	±10%	CL10B224KB8SFN#
8	0.90	16	X7R	220nF	±10%	CL10B224KO8SFN#
9	0.90	50	X7R	100nF	±10%	CL10B104KB8SFN#
10	0.90	50	X7R	100nF	±10%	CL10B104KB8ZW6#
11	0.90	50	X7R	56nF	±10%	CL10B563KB8SFN#
12	0.90	50	X7R	47nF	±10%	CL10B473KB8SFN#
13	0.90	50	X7R	33nF	±10%	CL10B333KB8SFN#
14	0.90	50	X7R	22nF	±10%	CL10B223KB8SFN#
15	0.90	50	X7R	15nF	±10%	CL10B153KB8SFN#
16	0.90	50	X7R	5.6nF	±10%	CL10B562KB8SFN#
17	0.90	50	X7R	4.7nF	±10%	CL10B472KB8SFN#
18	0.90	50	X7R	2.7nF	±10%	CL10B272KB8SFN#
19	0.90	50	X7R	2.2nF	±10%	CL10B222KB8SFN#
20	0.90	50	X7R	1.5nF	±10%	CL10B152KB8SFN#
21	0.90	50	X7R	1nF	±10%	CL10B102KB8SFN#

Size : 2.00 × 1.25mm (inch : 0805)

No.	Thickness Max. (mm)	Rated Voltage (Vdc)	TC code	Capacitance	Capacitance Tolerance	Part Number
1	1.40	10	X7R	10uF	±10%	CL21B106KPQZFN#
2	1.35	25	X7R	4.7uF	±10%	CL21B475KAFZF6#
3	1.35	25	X7R	4.7uF	±10%	CL21B475KAFZFN#
4	1.35	16	X7R	4.7uF	±10%	CL21B475KOFZFN#
5	1.40	16	X7R	4.7uF	±10%	CL21B475KOQZW6#
6	1.35	25	X7R	1uF	±10%	CL21B105KAFSFN#
7	1.35	50	X7R	1uF	±10%	CL21B105KBFSFN#
8	1.35	50	X7R	1uF	±10%	CL21B105KBFZFN#
9	1.35	16	X7R	1uF	±10%	CL21B105KOFSFN#
10	1.35	25	X7R	470nF	±10%	CL21B474KAFSFN#
11	1.35	100	X7R	220nF	±10%	CL21B224KCFSFN#
12	0.95	50	X7R	100nF	±10%	CL21B104KBCSFN#
13	1.35	100	X7R	100nF	±10%	CL21B104KCFSFN#
14	0.95	250	X7R	1nF	±10%	CL21B102KECSFN#
15	0.95	250	X7R	1nF	±10%	CL21B102KECSNN#
16	0.95	250	X7R	1nF	±10%	CL21B102KECSW6#

High Bending Strength Capacitors

Xin Yong Li

Size : 3.20 × 1.60mm (inch : 1206)

No.	Thickness Max. (mm)	Rated Voltage (Vdc)	TC code	Capacitance	Capacitance Tolerance	Part Number
1	1.80	25	X7R	10uF	±10%	CL31B106KAHSFN#
2	1.80	25	X7R	10uF	±10%	CL31B106KAHZW6#
3	1.80	35	X7R	10uF	±10%	CL31B106KLHSFN#
4	1.80	16	X7R	10uF	±10%	CL31B106KOHZFN#
5	1.80	25	X7R	4.7uF	±10%	CL31B475KAHZW6#
6	1.80	50	X7R	4.7uF	±10%	CL31B475KBHZFN#
7	1.80	100	X7R	2.2uF	±10%	CL31B225KCHSFN#
8	1.80	100	X7R	2.2uF	±10%	CL31B225KCHSNN#
9	1.80	50	X7R	1uF	±10%	CL31B105KBHSNN#
10	1.80	100	X7R	1uF	±10%	CL31B105KCHSFN#
11	1.80	100	X7R	1uF	±10%	CL31B105KCHSNN#
12	1.80	100	X7R	1uF	±10%	CL31B105KCHSW6#
13	1.80	100	X7R	470nF	±10%	CL31B474KCHSFN#
14	1.40	100	X7R	100nF	±10%	CL31B104KCFZW6#
15	1.80	250	X7R	100nF	±10%	CL31B474KCHSFN#
16	1.80	250	X7R	100nF	±10%	CL31B104KEHSW6#
17	1.80	250	X7R	47nF	±10%	CL31B473KEHSFN#
18	1.80	630	X7R	33nF	±10%	CL31B333KHHSFN#
19	1.80	630	X7R	22nF	±10%	CL31B223KHHSFN#
20	1.40	630	X7R	10nF	±10%	CL31B103KHFSFN#
21	1.40	630	X7R	10nF	±10%	CL31B103KHFSW6#
22	1.40	630	X7R	4.7nF	±10%	CL31B472KHFSFN#
23	1.40	630	X7R	3.3nF	±10%	CL31B332KHFSFN#
24	1.40	630	X7R	2.2nF	±10%	CL31B222KHFSFN#
25	1.40	630	X7R	1nF	±10%	CL31B102KHFSFN#
26	1.40	630	X7R	1nF	±10%	CL31B102KHFSW6#

Size : 3.20 × 2.50mm (inch : 1210)

No.	Thickness Max. (mm)	Rated Voltage (Vdc)	TC code	Capacitance	Capacitance Tolerance	Part Number
1	2.70	50	X7R	10uF	±10%	CL32B106KBJZW6#
2	2.70	50	X7R	4.7uF	±10%	CL32B475KBJSW6#
3	2.80	50	X7R	4.7uF	±10%	CL32B475KBVZNN#
4	2.80	100	X7R	4.7uF	±10%	CL32B475KCVZW6#
5	2.70	100	X7R	2.2uF	±10%	CL32B225KCJSFN#
6	2.70	100	X7R	2.2uF	±10%	CL32B225KCJSNN#
7	2.70	100	X7R	2.2uF	±10%	CL32B225KCJZW6#
8	2.70	100	X7R	1uF	±10%	CL32B105KCJSNN#

High Bending Strength Capacitors

Xin Yong Li

Product Line Up (X7S)

Size : 2.00 × 1.25mm (inch : 0805)

No.	Thickness Max. (mm)	Rated Voltage (Vdc)	TC code	Capacitance	Capacitance Tolerance	Part Number
1	1.35	100	X7S	220nF	±10%	CL21Y224KCFSW6#

Size : 3.20 × 2.50mm (inch : 1210)

No.	Thickness Max. (mm)	Rated Voltage (Vdc)	TC code	Capacitance	Capacitance Tolerance	Part Number
1	2.80	100	X7S	4.7uF	±10%	CL32Y475KCVZW6#

Low Acoustic Noise Capacitors

Low Acoustic Noise

Xin Yong Li

Features

- MLCC tremors can occur due to piezoelectric phenomena in electronic devices.
- These tremors are transmitted to the substrate, causing the substrate to tremble, causing audible noise (20Hz~20kHz).
- Low Acoustic Noise products are a solution that can effectively reduce this noise.

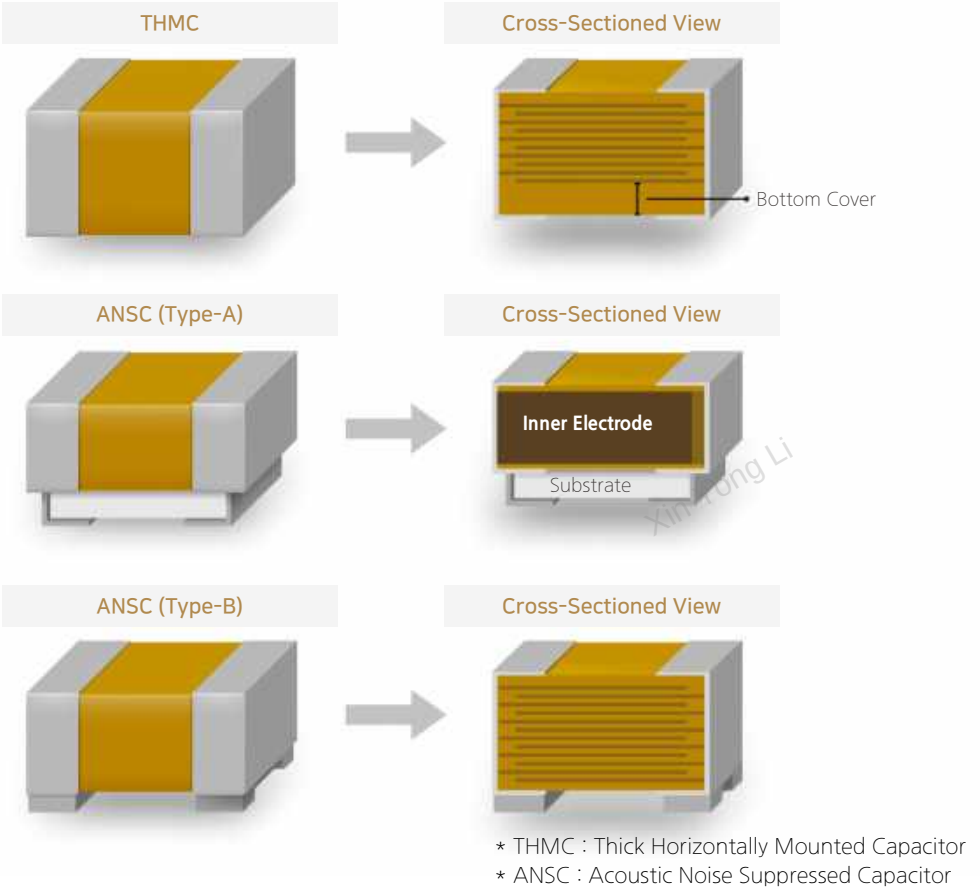

* THMC : Thick Horizontally Mounted Capacitor
* ANSC : Acoustic Noise Suppressed Capacitor

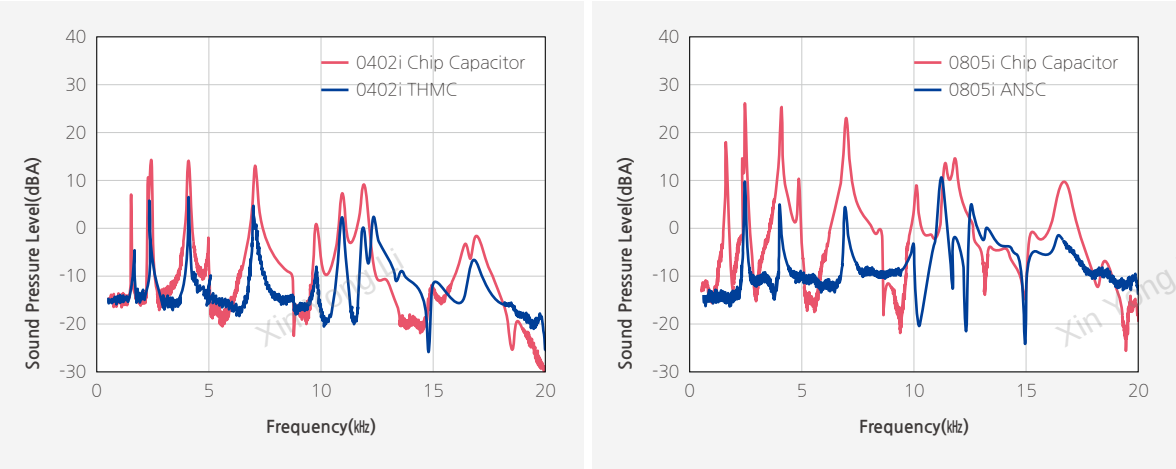

[Comparison of Noise Reduction Effects]

Low Acoustic Noise Capacitors

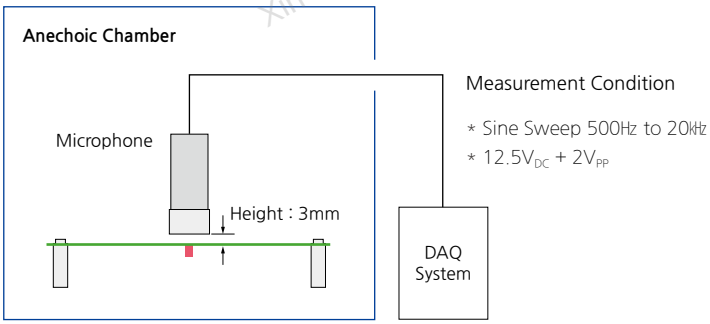

[Measurement System]

Application

- All Application (Smart Phone, PC, HDD/SSD Board, Tablet, Display, Etc), Power (SMPS, DC-DC Converter), Industrial Application

Structure and Dimensions

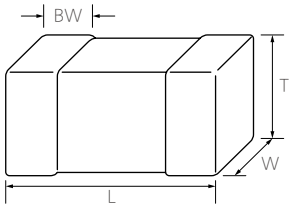

Size Code	Dimension (mm)					EIA (inch)
	L	W	T	Thkckness Code	BW	
05	1.00±0.25mm	0.50±0.25mm	0.60±0.25mm	6	0.25±0.10	0402
	1.00±0.15mm	0.50±0.15mm	0.70±0.10mm	7		
	1.00±0.20mm	0.50±0.20mm	0.80±0.10mm	8		
	1.00±0.20mm	0.50±0.20mm	0.90±0.10mm	9		
10	1.60±0.30mm	0.80±0.30mm	0.90±0.10mm	9	0.30±0.20	0603
	1.60±0.25mm	0.80±0.25mm	0.85±0.10mm	C	0.30±0.20	
	1.60±0.20mm	0.80±0.20mm	1.10±0.10mm	E		
	1.60±0.25mm	0.80±0.25mm	1.15±0.10mm	M		
	1.60±0.10mm	0.80±0.10mm	0.95±0.10mm	N		
21	2.00±0.20mm	1.25±0.20mm	1.10±0.10mm	E	0.50+0.20/-0.30	0805

Xin Yong Li

Low Acoustic Noise Capacitors

Xin Yong Li

Capacitance Table (X5R)

TC	Size mm (inch)	Rated Voltage (Vdc)	Capacitance Range
X5R (85℃)	1005 (0402)	6.3	10uF - 10uF
		10	2.2uF - 10uF
		25	2.2uF - 2.2uF
	1608 (0603)	6.3	10uF - 47uF
		10	4.7uF - 22uF
	2012 (0805)	25	10uF - 10uF

Capacitance Table (X6S)

TC	Size mm (inch)	Rated Voltage (Vdc)	Capacitance Range
X6S (105℃)	1005 (0402)	2.5	20uF - 20uF

Product Line Up (X5R)

Size : 1.00 × 0.50mm (inch : 0402)

No.	Thickness Max. (mm)	Rated Voltage (Vdc)	TC code	Capacitance	Capacitance Tolerance	Part Number
1	0.90	10	X5R	10uF	±20%	CL05A106MP8NUB#
2	1.00	10	X5R	10uF	±20%	CL05A106MP9NUB#
3	0.90	6.3	X5R	10uF	±20%	CL05A106MQ8NUB#
4	0.80	10	X5R	4.7uF	±20%	CL05A475MP7NRB#
5	0.80	10	X5R	2.2uF	±10%	CL05A225KP7NSB#

Product Line Up (X6S)

Size : 1.00 × 0.50mm (inch : 0402)

No.	Thickness Max. (mm)	Rated Voltage (Vdc)	TC code	Capacitance	Capacitance Tolerance	Part Number
1	0.85	2.5	X6S	20uF	±20%	CL05X206MS6N6B#

Low Acoustic Noise Capacitors

Xin Yong Li

Product Line Up (X5R)

Size : 1.60 × 0.80mm (inch : 0603)

No.	Thickness Max. (mm)	Rated Voltage (Vdc)	TC code	Capacitance	Capacitance Tolerance	Part Number
1	1.20	6.3	X5R	47uF	±20%	CL10A476MQENRB#
2	1.00	10	X5R	22uF	±20%	CL10A226MP9NZB#
3	0.95	10	X5R	22uF	±20%	CL10A226MPCNUB#
4	1.25	10	X5R	22uF	±20%	CL10A226MPMNUB#
5	0.95	6.3	X5R	22uF	±20%	CL10A226MQCNRB#
6	0.95	6.3	X5R	22uF	±20%	CL10A226MQCNUB#
7	1.25	6.3	X5R	22uF	±20%	CL10A226MQMNUB#
8	1.05	10	X5R	10uF	±20%	CL10A106MPNNHB#
9	1.05	6.3	X5R	10uF	±20%	CL10A106MQNNHB#
10	1.00	10	X5R	4.7uF	±10%	CL10A475KP9NHB#
11	1.20	25	X5R	10uF	±20%	CL10A106MAEURN#

Size : 2.00 × 1.25mm (inch : 0805)

No.	Thickness Max. (mm)	Rated Voltage (Vdc)	TC code	Capacitance	Capacitance Tolerance	Part Number
1	1.20	25	X5R	10uF	±10%	CL21A106KAENRB#

Low ESL Capacitors

Low ESL

Features

- MLCCs with low equivalent series inductance (ESL) can be used in circuits with limited mounting area, as a small quantity of such MLCCs can sufficiently replace high-speed IC MLCCs.

Multiple MLCC Used for Energy Transfer

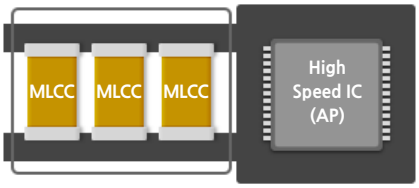

Multiple MLCC Used

Low ESL MLCC

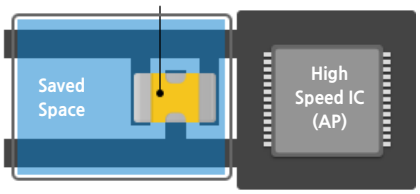

Low ESL MLCC Used

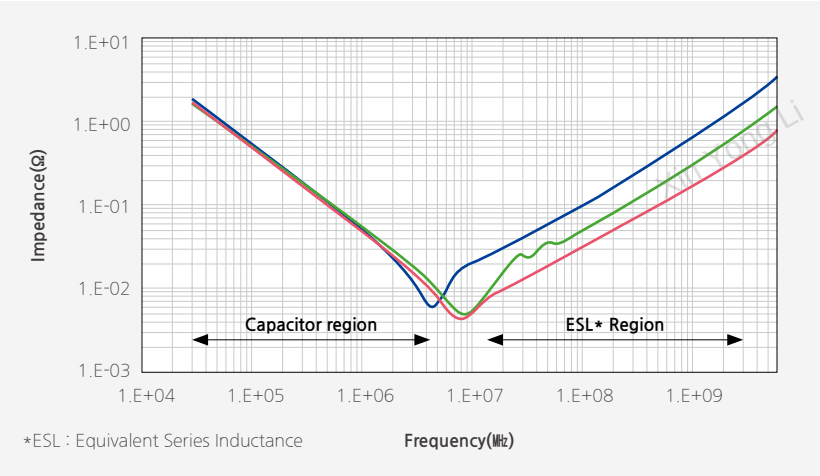

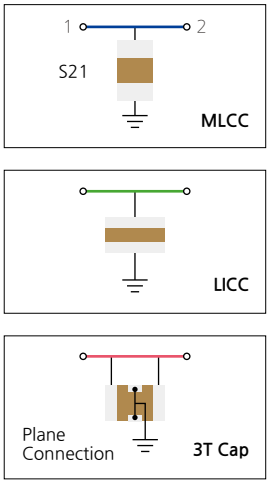

[Comparison between Impedance-Frequency Characteristics]

Application

- All Application (Smart Phone, Wearable Devices, IC Package, PC)

Xin Yong Li

Low ESL Capacitors

Xin Yong Li

Structure and Dimensions

Low ESL Capacitor_Reverse

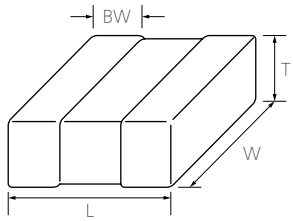

Size Code	Dimension (mm)					EIA (inch)
	L	W	T	Thkckness Code	BW	
L5	0.52±0.05mm	1.00±0.05mm	0.30±0.05mm	3	0.18±0.06	0204
01	0.80±0.15mm	1.60±0.20mm	0.50+0.05/-0.10mm	5	0.25±0.15	0306

Low ESL Capacitor_3T

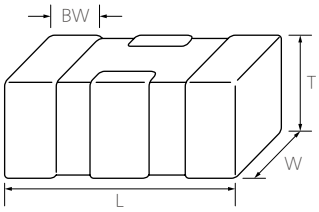

Size Code	Dimension (mm)							EIA (inch)
	L	W	T	Thkckness Code	BW			
					A	B	C	
05	1.00±0.05	0.65±0.05	0.45±0.05	5	0.17±0.10	0.35±0.10	0.15±0.10	0402
05	1.00±0.15mm	0.50±0.15mm	0.50±0.15mm	6	0.15±0.10	0.35±0.10	0.15±0.10	0402
05	1.00±0.15mm	0.50±0.15mm	0.30±0.09mm	B	0.20±0.10	0.35±0.10	0.15±0.10	0402
19	1.20±0.05mm	0.90±0.05mm	0.75±0.05mm	7	0.15±0.11	0.50±0.10	0.20±0.10	0503

Low ESL Capacitor_8T

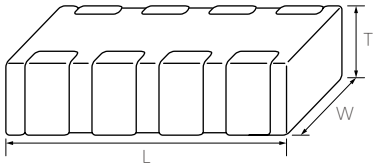

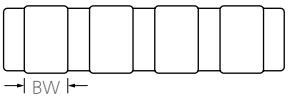

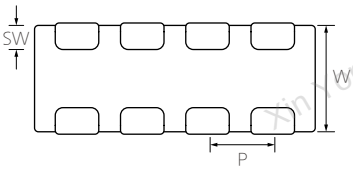

Size Code	Dimension (mm)							EIA (inch)
	L	W	T	Thkckness Code	BW			
					A	B	C	
10	1.60±0.10	0.80±0.10	0.5+ 0.05/- 0.1	5	0.25±0.10	0.15±0.10	0.40±0.10	0603
21	2.00±0.10	1.25±0.10	0.5+ 0.05/- 0.1	5	0.25+0.15-0.1	0.20+0.15-0.1	0.50±0.10	0805

Low ESL Capacitors

Xin Yong Li

Capacitance Table_3T

TC	Size mm (inch)	Rated Voltage (Vdc)	Capacitance Range
X5R (85℃)	1005 (0402)	4	4.3uF - 15uF
	1209 (0503)	4	22uF - 22uF

Capacitance Table_8T

TC	Size mm (inch)	Rated Voltage (Vdc)	Capacitance Range
X7S (125℃)	1608 (0603)	4	100nF - 2.2uF
	2012 (0805)	4	2.2uF - 2.2uF

Capacitance Table_Reverse

TC	Size mm (inch)	Rated Voltage (Vdc)	Capacitance Range
X6S (105℃)	0510 (0204)	4	1uF - 1uF
X7S (125℃)	0510 (0204)	6.3	100nF - 100nF
	0816 (0306)	4	1uF - 1uF

Product Line Up (X6S)

Size : 0.52 × 1.00mm (inch : 0204)

No.	Thickness Max. (mm)	Rated Voltage (Vdc)	TC code	Capacitance	Capacitance Tolerance	Part Number	Remarks
1	0.35	4	X6S	1uF	±20%	CLL5X105MR3NLN#	Reverse (Low ESL)

Product Line Up (X7S)

Size : 0.52 × 1.00mm (inch : 0204)

No.	Thickness Max. (mm)	Rated Voltage (Vdc)	TC code	Capacitance	Capacitance Tolerance	Part Number	Remarks
1	0.35	6.3	X7S	100nF	±20%	CLL5Y104MQ3NLN#	Reverse (Low ESL)

Size : 0.80 × 1.60mm (inch : 0306)

No.	Thickness Max. (mm)	Rated Voltage (Vdc)	TC code	Capacitance	Capacitance Tolerance	Part Number	Remarks
1	0.55	4	X7S	1uF	±20%	CL01Y105MR5NLN#	Reverse (Low ESL)

Low ESL Capacitors

Xin Yong Li

Product Line Up (X5R)

Size : 1.00 × 0.50mm (inch : 0402)

No.	Thickness Max. (mm)	Rated Voltage (Vdc)	TC code	Capacitance	Capacitance Tolerance	Part Number	Remarks
1	0.65	4	X5R	15uF	±20%	CL05A156MR6NWR#	3T (Low ESL)
2	0.50	4	X5R	4.3uF	±20%	CL05A435MR5NWN#	3T (Low ESL)

Size : 1.20 × 0.90mm (inch : 0503)

No.	Thickness Max. (mm)	Rated Voltage (Vdc)	TC code	Capacitance	Capacitance Tolerance	Part Number	Remarks
1	0.80	4	X5R	22uF	±20%	CL19A226MR7NWN#	3T (Low ESL)

Product Line Up (X7S)

Size : 1.60 × 0.80mm (inch : 0603)

No.	Thickness Max. (mm)	Rated Voltage (Vdc)	TC code	Capacitance	Capacitance Tolerance	Part Number	Remarks
1	0.55	4	X7S	2.2uF	±20%	CL10Y225MR5NJN#	8T (Low ESL)
2	0.55	4	X7S	470nF	±20%	CL10Y474MR5NJN#	8T (Low ESL)
3	0.55	4	X7S	100nF	±20%	CL10Y104MR5NJN#	8T (Low ESL)

Size : 2.00 × 1.25mm (inch : 0805)

No.	Thickness Max. (mm)	Rated Voltage (Vdc)	TC code	Capacitance	Capacitance Tolerance	Part Number	Remarks
1	0.55	4	X7S	2.2uF	±20%	CL21Y225MR5NJN#	8T (Low ESL)

Array Type Capacitors

Array

Features

- As various electronic products such as portable devices have gotten smaller, several chips have been unified in order to secure mounting space.
- This reduces cost of mounting and ripple voltage.

❶ End Termination
❷ Ceramic Body

Application

- All Application (Phone, PC, HDD/SSD Board, Tablet, Display, etc)

Structure and Dimensions

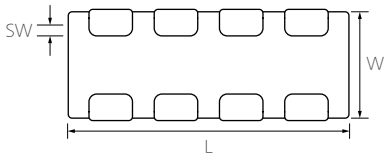

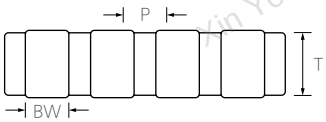

Size Code	Dimension (mm)							EIA (inch)
	L	W	T	Thkckness Code	BW			
					A	B	C	
21	2.00±0.15mm	1.25±0.15mm	0.85±0.10mm	C	0.25±0.10	0.25±0.15	0.50±0.10	0805
31	3.20±0.15mm	1.60±0.15mm	0.85±0.15mm	C	0.40±0.20	0.30±0.15	0.80±0.20	1206

Xin Yong Li

Array Type Capacitors

Xin Yong Li

Capacitance Table (X7R)

TC	Size mm (inch)	Rated Voltage (Vdc)	Capacitance											Capacitance Range
			pF				nF			uF				
			0.1	1	10	100	1	10	100	1	10	100		
X7R (125℃)	2012 (0805)	16												100nF - 100nF
	3216 (1206)	25												

Product Line Up (X7R)

Size : 2.00 × 1.25mm (inch : 0805)

No.	Thickness Max. (mm)	Rated Voltage (Vdc)	TC code	Capacitance	Capacitance Tolerance	Part Number	Remarks
1	0.95	16	X7R	100nF	±20%	CL21B104MOCNBN#	8T(Array)

Size : 3.20 × 1.60mm (inch : 1206)

No.	Thickness Max. (mm)	Rated Voltage (Vdc)	TC code	Capacitance	Capacitance Tolerance	Part Number	Remarks
1	1.00	25	X7R	47nF	±20%	CL31B473MACNBN#	8T(Array)

Application Guide

Smartphone / Tablet

As smartphone has high-performance hardware functions to provide enhanced user experience, various voltage regulators are required for each IC. Power management system includes several PMICs as well as charging system with external passive components.

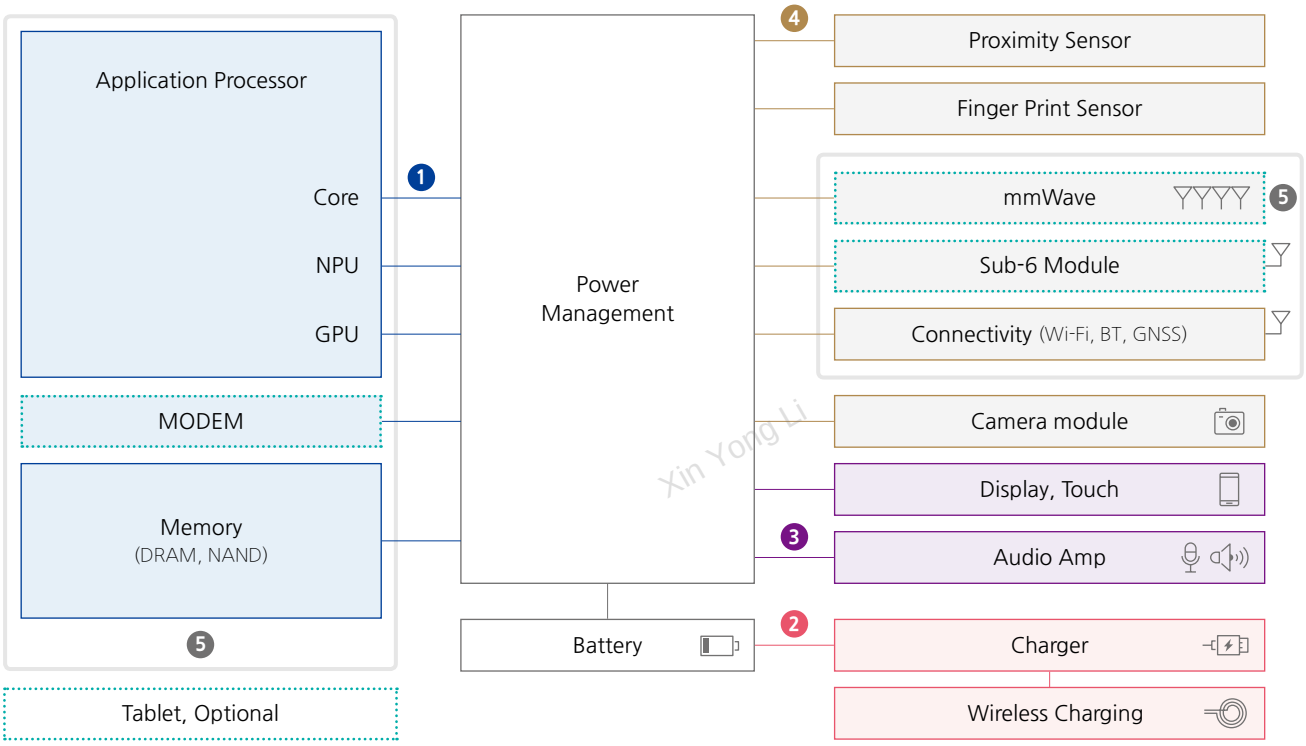

Noise Filtering, Stable Power Delivery	High Bending Strength	Middle & High Freq. Noise	Audible Noise	High Freq. Noise, Limited Space
Normal	**Soft Termination**	**Low ESL**	**Low Acoustic**	**Embedded/LSC**
1 High C	2 4 2㎜ ↑	1 3T	2 THMC, ANSC	5 Low Profile
2 3 10V ↑				
4 Low Profile				

Application Guide

Laptop

Laptop consist of various form factors and functions by models in consideration of the needs of various customers. In order to implement those functions, many of such function blocks as Memory, Storage, Wi-Fi, are organically connected around the CPU module, and require various power sources. In accordance with the recent trend of high performance, miniaturization and sliming of the sets, passive components are being developed with a focus on high temperature and high capacitance.

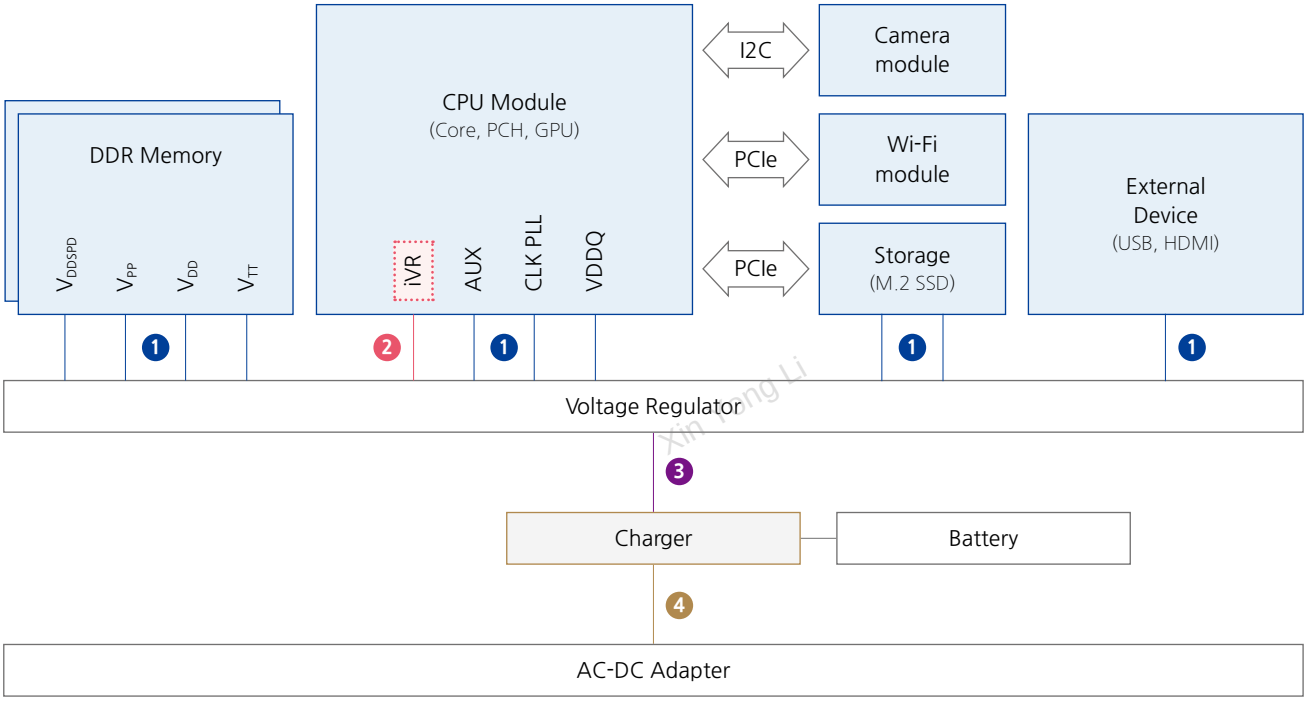

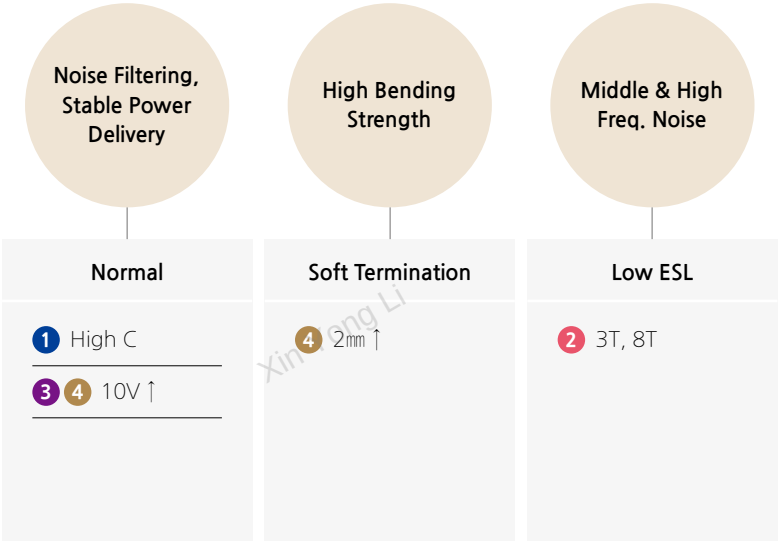

Xin Yong Li

Application Guide

Server

In recent years, many technologies with upgraded performance, such as high-performance CPU, PCIe 5.0, and DDR5 are being applied to servers. Since such a high-performance server consumes a large amount of current during operation and generates a lot of heat to deteriorate the operation environment, high reliability of the components is required. CPU power line consuming a large amount of currents requires many small-sized and high-capacitance MLCCs to lower the impedance, and the components for high-temperature in the high-temperature environment around CPU.

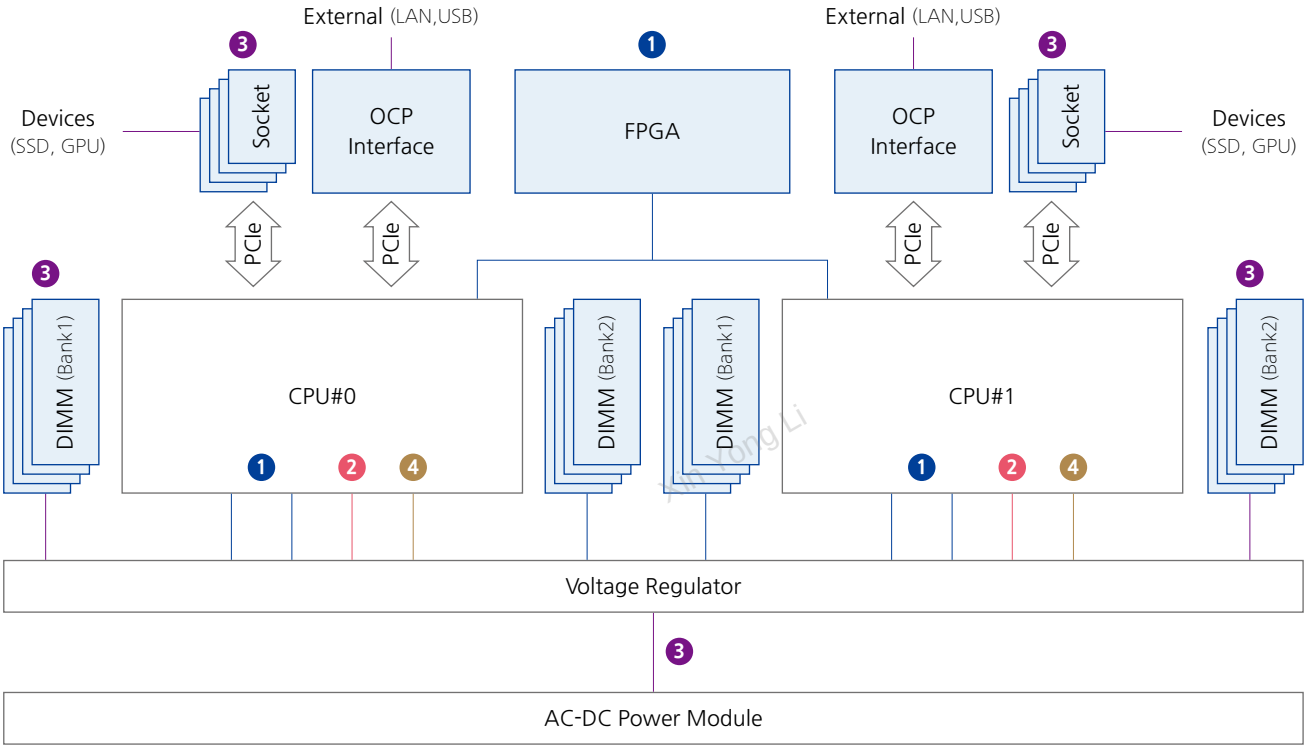

Noise Filtering, Stable Power Delivery	High Bending Strength	Middle & High Freq. Noise
Normal	**Soft Termination**	**Low ESL**
1 High C	3 3㎜↑	2 3T, 8T
3 16V↑		
4 High Temp.		
(High Level Ⅰ)		

Application Guide

Network (Base Station)

RUs are required to be small, light-weight and highly reliable because most of them are exposed to the sunlight being installed on towers or building roofs. With the introduction of 5G, high-integrated and high-performance FPGA/DSP are being used for network equipment to cope with the demand of faster data processing speed and to process the data traffic surge. Accordingly, the demand for high-capacitance MLCCs for stable power supply to high-performance ICs is increasing.

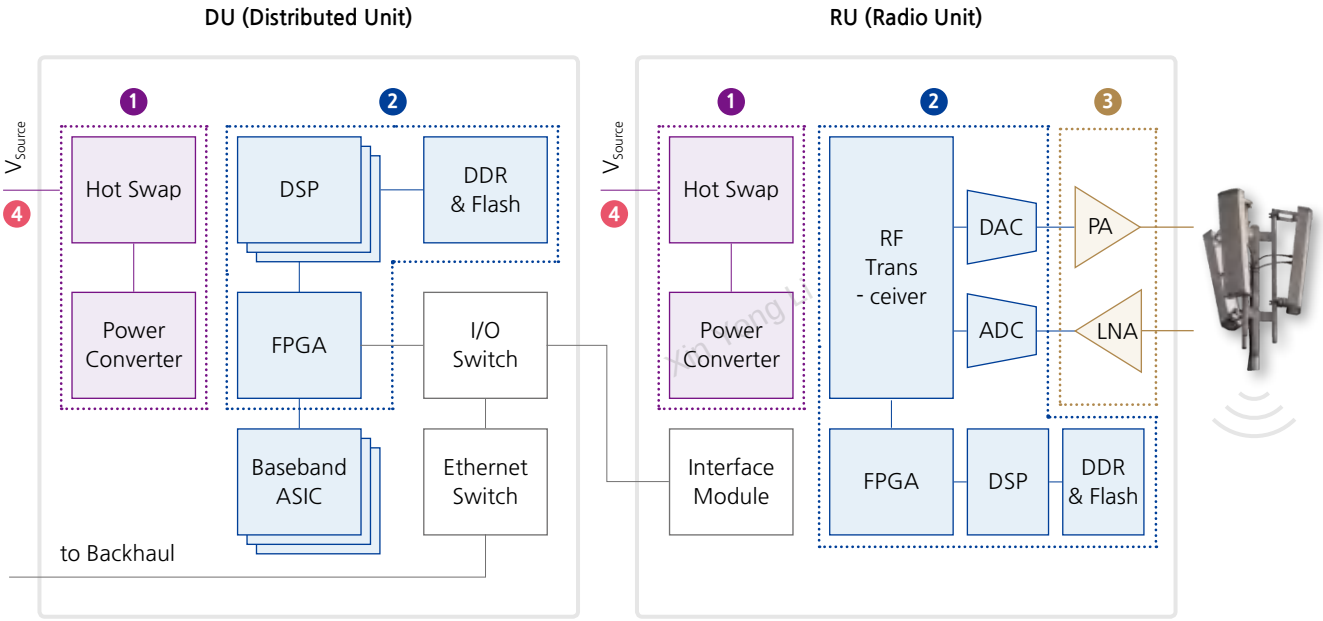

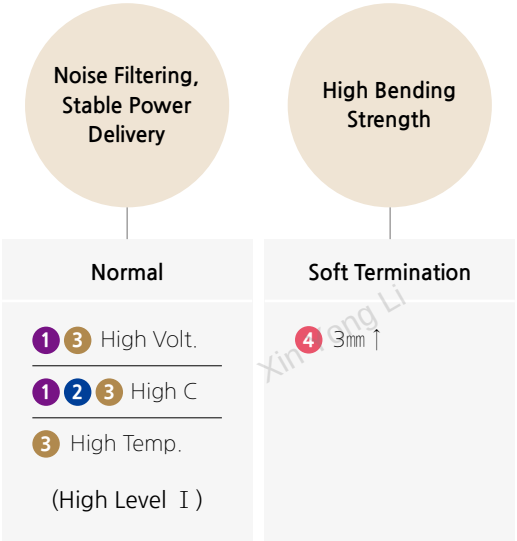

Xin Yong Li

Reliability Test Conditions

Xin Yong Li

No.	Item		Performance	Test condition
1	Appearance		No abnormal exterior appearance	Visual Inspection through Microscope (x10)
2	Insulation resistance		10,000MΩ min. or 500MΩ·μF min. (or 100MΩ·μF) product whichever is smaller (Rated voltage ≤16V :10,000MΩ min. or 100MΩ·μF min. product whichever is smaller)	Apply the rated voltage for 60 ~ 120sec. Ratedvoltage > 500V: InsulationResistance shall be measured with 500±50Vdc
3	Withstanding voltage		No dielectric breakdown ormechanical breakdown	Apply the specified voltage* for 1~5 sec. Charge / Discharge current limit: 50mA max. * CLASS Ⅰ (Rated Voltage < 100V) : 300% of the rated Voltage CLASS Ⅱ (Rated Voltage < 100V) : 250% of the rated Voltage In the case of Vr ≥100V products, following condition shouldbe applied. 100V≤Rated Voltage < 500V : 200% of the rated Voltage 1000V≤Rated Voltage < 1000V :150% of the rated Voltage Rated Voltage≥1000V :120% of the rated Voltage
4	Capaci-tance	Class Ⅰ	Within the specified tolerance	
		Class Ⅱ	Within the specified tolerance	
5	Q	Class Ⅰ	Capacitance ≥30pF : Q ≥ 1,000 < 30pF : Q ≥ 400+20×C (C : Capacitance)	
	Tanδ	Class Ⅱ		

1. Characteristic : A (X5R)

Rated Voltage	Spec
50V /35V	0.025 max / 0.05 max*
25V	0.025 max / 0.05 max* / 0.10 max*
16V	0.035 max / 0.10 max*
≤10	0.035 max / 0.10 max*

2. Characteristic :B (X7R), X (X6S), Y (X7S)

Rated Voltage	Spec
50V≥/ 35V / 25V	0.025 max / 0.05 max* / 0.10 max*
16V	0.035 max / 0.10 max*
≤10V	0.05 max / 0.10 max*

3.Characteristic : F (Y5V)

Rated Voltage	Spec
50V / 35V / 25V	0.05 max / 0.07 max* / 0.09 max*
16V	0.07 max / 0.09 max* / 0.125 max*
10V	0.125 max / 0.16 max*
≤6.3V	0.16 max

※ The conditions of measurement may be altered upon request.

Class Ⅰ

Capacitance	Frequency	Voltage
≤1,000pF	1MHz±10%	0.5~5Vrms
>1,000pF	1kHz±10%	

Class Ⅱ

Capacitance	Frequency	Voltage
≤10μF	1kHz±10%	1.0±0.2Vrms
>10μF	120Hz±20%	0.5±0.1Vrms

Exception

Capacitance	Frequency	Voltage
0201 (0603)size 0.22μF≤C≤10μF Less than 10V 0402 (1005) size, 2.2μF≤C≤10μF Less than 25V 0603 (1608) size, 10μF Less than 25V 05J105KP5N3* 05J105KQ5N3* 03A105MO3NR* 10B225KP8* 21A475KQQ* 21A106KQQ* 21A625KPQ* 21X106MRC* 21X106KQQ* 21B106KOQ*	1kHz±10%	0.5±0.1Vrms

※ A capacitor prior to measuring the capacitance is heat treated at 150℃+0/-10℃ for 1hour and maintained in ambient air for 24±2 hours. (Class Ⅱ)

You can check the specification at the web site or contact sales people for each product with mark*

Reliability Test Conditions

Xin Yong Li

No.	Item		Performance	Test condition
6	Temperature characteristics of capacitance	Class Ⅰ	Characteristic: c Temp. coefficien(PPM/℃): 0 ±30	apacitance shall be measured by the steps shown in the following table. Step / Temperature(℃) 1: 25 ± 2 2: Min. operating temp ± 2 3: 25 ± 2 4: Max. operating temp ± 2 5: 25 ± 2 (1) Class Ⅰ Temperature Coefficient shall be calculated from the formula as below Temp. Coefficient = $\frac{C2-C1}{C1\times\Delta T}\times 10^6$[ppm/℃] C1 : Capacitance at 3 C2 : Capacitance at 125℃ ΔT : 125℃-25℃=100℃ (1) Class Ⅱ Capacitance change shall be calculated from the formula as below $\Delta C = \frac{C2-C1}{C1}\times 100(\%)$ C1 : Capacitance at step 3 C2 : Capacitance at step 2 & step 4
		Class Ⅱ	Capacitance change / Capacitance change Characteristic / Capacitance change(%) without no bias A(X5R) / B(X7R): ±15% X(X6S), Y(X7S): ±22% Z(X7T): +22% ~ -33% F(Y5V): +22% ~ -82%	
7	Adhesive strength of termination		No indication of peeling shall occur on the terminal electrode.	Apply 500g.f*pressure for 10±1 sec. *200g.f for 0201 *100g.f for 01005 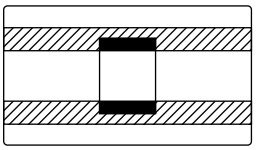 500g.f
8	Bending strength	Appearance	No mechanical damage shall occur.	Bending Limit: 1mm Test Speed: 1.0mm/sec. Keep the test board at the limit point in 5 sec. Then Measure Capacitance 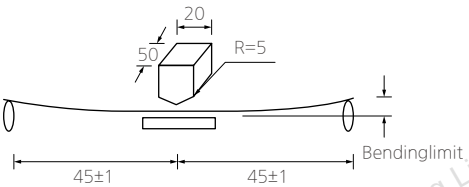
		Capacitance	Capacitance change / Capacitance change Class Ⅰ: Within ±5% or ±0.5pF whichever is larger Class Ⅱ: A(X5R), B(X7R), X(X6S), Y(X7S) Z(X7T): Within ±10%	
9	Solderability		More than 75% of the terminal surface is to be soldered newly, so metal part does not come out or dissolve 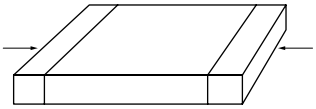	Solder: Sn_Ag3_0.5Cu Solder temp.: 245±5℃ Flux: RMA Type Dip time: 3±0.3sec Pre-heating: at 80~120℃ for 10~30sec.

Reliability Test Conditions

Xin Yong Li

No.	Item		Performance	Test condition
10	Resis-tance to soldering heat	Appearance	No mechanical damage shall occur	Solder temperature: 270±5℃DIP TIME:10±1 sec. Each termination shall be fully immersed and preheated as below: Step / Temp.(℃) / Time(sec.) 1 / 80~100 / 60 2 / 150~180 / 60 Leave the capacitor in ambient condition for specified time* before measurement. * 24±2 Hours (Class Ⅰ) 24±2 Hours (Class Ⅱ)
		Capacitance	Capacitance change / Capacitance change Class Ⅰ: ±2.5% or ±0.25pF whichever is larger Class Ⅱ A(X5R), B(X7R), X(X6S), Y(X7S) Z(X7T): Within ±7.5% Class Ⅱ F(Y5V): Within ±20%	
		Q (Class Ⅰ)	Within the specified initial value	
		Tanδ (Class Ⅱ)	Within the specified initial value	
		Insulation resistance	Within the specified initial value	
		Withstand-ing voltage	No breakdown of dielectric	
11	Vibration test	Appearance	No mechanical damage shall occur.	The capacitor shall be subjected to a harmonic motion having a total amplitude of 1.5mm changing frequency from 10Hz to 55Hz and back to 10Hz in about 1 min. Repeat this for 2hours each in 3mutually perpendicular directions.
		Capacitance	Capacitance change / Capacitance change Class Ⅰ: ±2.5% or ±0.25pF whichever is larger Class Ⅱ A(X5R), B(X7R): Within ±5% Class Ⅱ X(X6S), Y(X7S) Z(X7T): Within ±10% Class Ⅱ F(Y5V): Within ±20%	
		Q (Class Ⅰ)	Within the specified initial value	
		Tanδ (Class Ⅱ)	Within the specified initial value	
		Insulation resistance	Within the specified initial value	

Reliability Test Conditions

Xin Yong Li

<table>
<tr><th>No.</th><th colspan="2">Item</th><th>Performance</th><th>Test condition</th></tr>
<tr><td rowspan="4">12</td><td rowspan="4">Moisture resis-tance</td><td>Appearance</td><td>No mechanical damage shall occur</td><td rowspan="4">Applied voltage : Rated voltage

Temperature : 40±2℃
Humidity : 90~95%RH
Duration time : 500+12/-0Hr.
Charge/Discharge current : 50㎃ max.

Perform the initial measurement according to Note1.
Perform the final measurement according to Note2.

This test is only applied to Vr≤500V products.
You can check the specification at the web site or contact sales people for each product with mark*</td></tr>
<tr><td>Capacitance</td><td>
<table>
<tr><th>Capacitance change</th><th colspan="2">Capacitance change</th></tr>
<tr><td colspan="2">Class Ⅰ</td><td>±7.5% or ±0.75pF whichever is larger</td></tr>
<tr><td rowspan="2">Class Ⅱ</td><td>A(X5R), B(X7R), X(X6S), Y(X7S) Z(X7T)</td><td>Within ±12.5%</td></tr>
<tr><td>F(Y5V)</td><td>±30%</td></tr>
</table>
</td></tr>
<tr><td>Q (Class Ⅰ)</td><td>Capacitance ≥30pF: Q≥200
<30pF: Q≥100+10/3×C
(C: Capacitance)</td></tr>
<tr><td>Tanδ (Class Ⅱ)</td><td>1. Capacitance : A (X5R)
0.05 max / 0.075 max* (35V / 50V)
0.05 max / 0.075 max* / 0.125 max*(16V / 25V)
0.075 max / 0.125 max* (≤10V)

2. Capacitance : B (X7R), X (X6S)
0.05 max / 0.125 max* (16V / 25V / 35V / 50V≥)
0.075 max / 0.125 max* (≤10V)

3. Capacitance : F (Y5V)
0.09 max (50V)
0.09 max / 0.125 max* (25V / 35V)
0.09 max / 0.125 max* / 0.16 max* (16V)
0.16 max / 0.195 max* (10V)
0.195 max (4V / 6.3V)</td></tr>
<tr><td></td><td>Insulation resistance</td><td>500MΩ min. or 25MΩ·μF min. product whichever is smaller / 12.5MΩ·μF or over*</td></tr>
</table>

Reliability Test Conditions

Xin Yong Li

No.	Item		Performance	Test condition
13	High temperature resistance	Appearance	No mechanical damage shall occur	Temperature : max. operating temperature Duration Time: 1000+48/-0 Hr. Charge/Discharge Current: 50mAmax. Apply Voltage : 100% of Rated Voltage It depends on each item (120%/150%/200% Rated Voltage) Perform the initial measurement according to Note1 for class Ⅱ Perform the final measurement according to Note2. You can check the specification at the web site or contact sales people for each product with mark*
		Capacitance	Capacitance change / Capacitance change Class Ⅰ: ±3% or ±0.3pF whichever is larger Class Ⅱ: A(X5R), B(X7R), X(X6S), Y(X7S), Z(X7T): Within ±12.5% Class Ⅱ: F(Y5V): ±30%	
		Q (Class Ⅰ)	Capacitance≥30pF : Q≥350 10pF≤Capacitance<30pF : Q≥275+2.5×C Capacitance < 10pF: Q≥200+10×C (C: Capacitance)	
		Tanδ (Class Ⅱ)	1. Capacitance :A (X5R) 0.05 max / 0.075 max* (35V / 50V) 0.05 max / 0.075 max* / 0.125 max*(16V / 25V) 0.075 max / 0.125 max* (≤10V) 2. Capacitance : B (X7R), X (X6S) 0.05 max / 0.125 max* (16V / 25V / 35V / 50V≥) 0.075 max / 0.125 max* (≤10V) 3. Capacitance : F (Y5V) 0.09 max (50V) 0.09 max / 0.125 max* (25V / 35V) 0.09 max / 0.125 max* / 0.16 max* (16V) 0.16 max / 0.195 max* (10V) 0.195 max (4V / 6.3V)	
		Insulation resistance	1,000MΩmin. or 50MΩ·μFmin. product whichever is smaller / 25MΩ·μFor over*	

Reliability Test Conditions

Xin Yong Li

No.	Item		Performance	Test condition
14	Tempera-ture cycle	Appearance	No mechanical damage shall occur	Capacitor shall be subjected to 5 cycles. Condition for 1 cycle :
		Capacitance		

Capacitance change		Capacitance change
Class Ⅰ		±3% or ±0.3pF whichever is larger
Class Ⅱ	A(X5R)	Within ±7.5%/±10%//±15%*
	B(X7R)	Within ±7.5%
	X(X6S), Y(X7S) Z(X7T)	Within ±15%
	F(Y5V)	Within ±20%

Step	Temp.(℃)	Time(sec.)
1	Min.rated temp.+0/-3	30
2	25	2~3
3	Max.rated temp.+3/-0	30
4	25	2~3

Leave the capacitor in ambient condition for specified time before measurement.
* 24±2 Hours (Class Ⅰ)
24±2 Hours (Class Ⅱ)

Q (Class Ⅰ)	Within the specified initial value	
Tanδ (Class Ⅱ)	Within the specified initial value	
Insulation resistance	Within the specified initial value	

Note 1. Initial Measurement For Class Ⅱ
Perform the heat treatment at 150℃ +0/-10℃ for 1 hour. Then Leave the capacitor in ambient condition for 24±2 hours before measurement
Then perform the measurement.

Note 2. Latter Measurement

1. CLASS Ⅰ
Leave the capacitor in ambient condition for 24±2 hours before measurement. Then perform the measurement.
2. CLASS Ⅱ
Perform the heat treatment at 150℃ +0/-10℃ for 1 hour. Then Leave the capacitor in ambient condition for 24±2 hours before measurement.
Then perform the measurement.

Note 3. All Size in Reliability Test Condition Section is "inch"

Note 4. Camera Strobe Circuit Capacitors Should be Following a Special Reliability Test Condition.
Please check with our sales representatives or product engineers.

Packaging Specifications

Packaging

This specification applies to taping of MLCC. When customers require, the specification may be changed under the agreement.

1 Figure

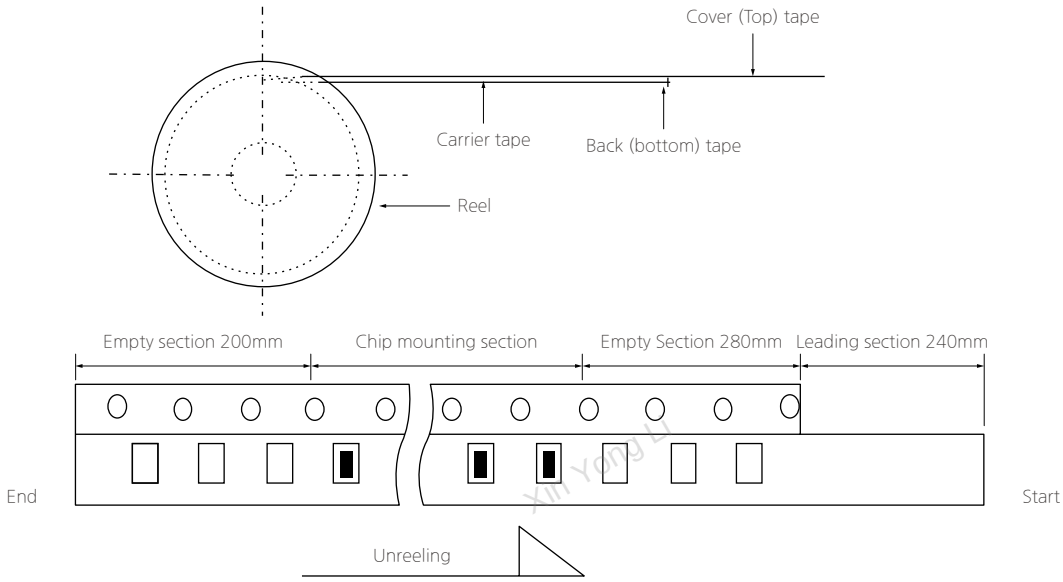

2 Quantity

(Unit : pcs)

Type	Size mm (inch)	Chip Thickness (mm)	Taping Type	Pitch (mm)	Plastic 7 inches reel	Plastic 10 inches reel	Plastic 13 inches reel
MLCC	01005 (0402)	0.2	PAPER	2	20k	-	100K
	0201 (0603)	0.3	PAPER	2	10K	-	50K
	0402 (1005)	0.5	PAPER	2	10K	-	50K
	0603 (1608)	0.8	PAPER	4	4K	10K	15K/10K
	0805 (2012)	T ≤ 0.85	PAPER	4	4K	10K	15K/10K
		T ≥ 1.0	EMBOSSED	4	2K	6K	10K
	1206 (3216)	T ≤ 0.85	PAPER	4	4K	10K	10K
		T ≥ 1.0	EMBOSSED	4	2K	4K	10K
	1210 (3225)	T ≤ 1.6	EMBOSSED	4	2K	4K	10K
		T ≥ 2.0	EMBOSSED	4	1K	4K	4K
	1808 (4520)	T ≤ 1.6	EMBOSSED	8	2k	-	8k
		T ≥ 2.0	EMBOSSED	8	1k	-	4k
	1812 (4532)	T ≤ 2.0	EMBOSSED	8	-	-	4K
		T > 2.0	EMBOSSED	8	-	-	2K
	2220 (5750)	T ≥ 2.5	EMBOSSED	8	-	-	2K

Packaging Specifications

Xin Yong Li

3 Tape Size

Ⅰ. Cardboard(Paper) tape : 4mm pitch

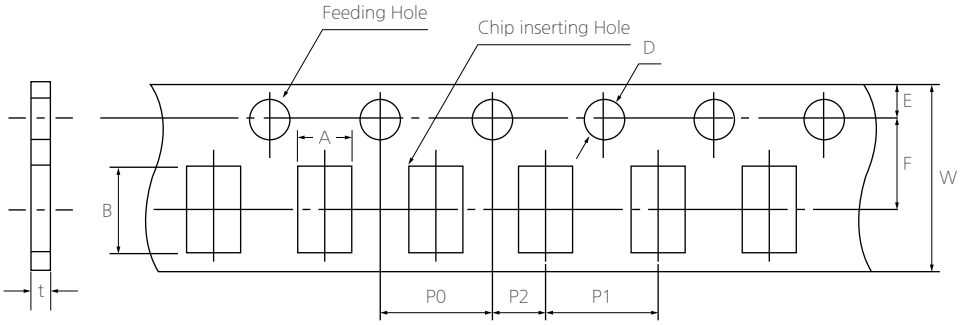

(Unit : mm)

Size mm (inch)	A	B	W	F	E	P1	P2	P0	D	t
1608 (0603)	1.00 ±0.10	1.90 ±0.10	8.00 ±0.30	3.50 ±0.05	1.75 ±0.10	4.00 ±0.10	2.00 ±0.05	4.00 ±0.10	φ1.50 +0.10/-0	1.1 Below
2012 (0805)	1.55 ±0.10	2.30 ±0.10								
3216 (1206)	2.05 ±0.10	3.60 ±0.10								

※ The A, B in the table above are based on normal dimensions. The data may be changed with the special size tolerances.

Ⅱ. Cardboard(Paper) tape : 2mm pitch

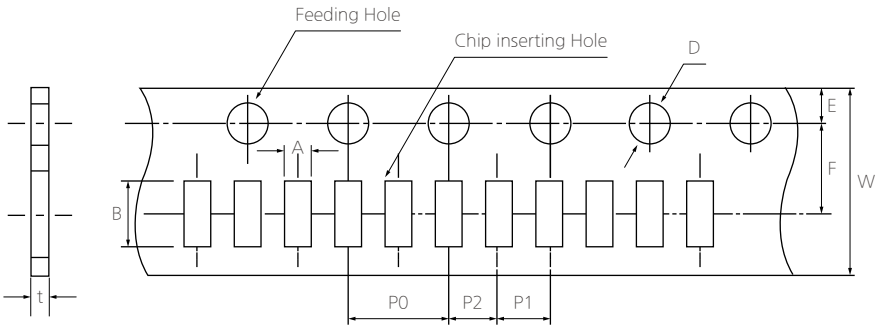

(Unit : mm)

Size mm (inch)	A	B	W	F	E	P1	P2	P0	D	t
0402 (01005)	0.25 ±0.02	0.46 ±0.02	8.00 ±0.30	3.50 ±0.05	1.75 ±0.10	4.00 ±0.10	2.00 ±0.05	4.00 ±0.10	φ1.50 +0.1/-0.03	0.25 ±0.02
0603 (0201)	0.38 ±0.03	0.68 ±0.03								0.35 ±0.03
1005 (0402)	0.62 ±0.05	1.12 ±0.05								0.60 ±0.05
0510 (0204)	0.62 0.05 /-0.10	1.12 0.05 /-0.10								0.37 ±0.03

※ The A, B in the table above are based on normal dimensions. The data may be changed with the special size tolerances.

Packaging Specifications

Xin Yong Li

Ⅲ. Embossed (Plastic) tape

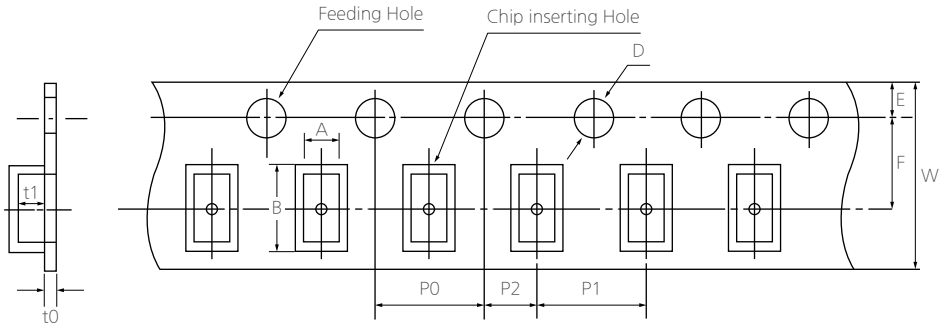

(Unit : mm)

Size mm (inch)	A	B	W	F	E	P1	P2	P0	D	t1	t0
0402 (01005)	0.23 ±0.02	0.45 ±0.02	4.00 ±0.05	1.80 ±0.02	0.90 ±0.05	1.00 ±0.02	1.00 ±0.02	2.00 ±0.03	φ0.80 ±0.04	0.35 Below	0.50 Below
05025 (015008)	0.32 ±0.03	0.58 ±0.03	8.00 ±0.30	3.50 ±0.05	1.75 ±0.10	2.00 ±0.05	2.00 ±0.05	4.00 ±0.10	φ1.50 0.1/-0.03		
1608 (0603)	1.05 ±0.15	1.90 ±0.15				4.00 ±0.10			φ1.50 0.1/-0	2.92 Below	0.60 Below
2012 (0805)	1.45 ±0.20	2.30 ±0.20									
3216 (1206)	1.90 ±0.20	3.50 ±0.20									
3225 (1210)	2.80 ±0.20	3.60 ±0.20									
4520 (1808)	2.30 ±0.20	4.90 ±0.20	12.0 ±0.30	5.60 ±0.05		8.00 ±0.10				3.80 Below	
4532 (1812)	3.60 ±0.20	4.90 ±0.20									
5750 (2220)	5.50 ±0.20	6.20 ±0.20									
0510 (0204)	0.62 0.05 /-0.10	1.12 0.05 /-0.10	8.00 ±0.30	3.50 ±0.05		4.00 ±0.10				2.50 Below	
0816 (0306)	1.10 ±0.20	1.90 ±0.20									

※ The A, B in the table above are based on normal dimensions. The data may be changed with the special size tolerances.

Packaging Specifications

Xin Yong Li

Ⅳ. Reel Size

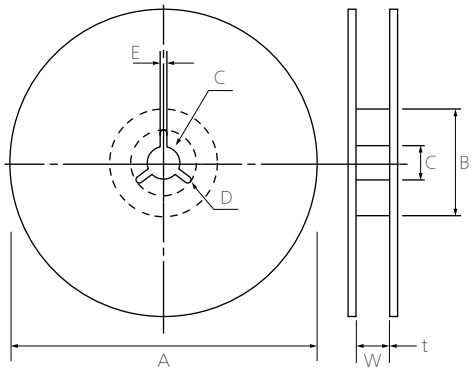

(Unit : mm)

Symbol	Tape Width	A	B	C	D	E	W	t
7"Reel	4mm	φ178±2.0	MINφ50	φ13±0.5	21±0.8	2.0±0.5	5±0.5	1.2±0.2
	8mm	φ178±2.0	MINφ50	φ13±0.5	21±0.8	2.0±0.5	10±1.5	0.9±0.2
	12mm	φ178±2.0	MINφ50	φ13±0.5	21±0.8	2.0±0.5	13±0.5	1.2±0.2
10"Reel	8mm	φ258±2.0	MINφ70	φ13±0.5	21±0.8	2.0±0.5	10±1.5	1.8±0.2
13"Reel	8mm	φ330±2.0	MINφ70	φ13±0.5	21±0.8	2.0±0.5	10±1.5	1.8±0.2
	12mm	φ330±2.0	MINφ70	φ13±0.5	21±0.8	2.0±0.5	13±0.5	2.2±0.2

4 Cover tape peel-off force

Ⅰ. Peel-off force

10 g.f ≤ peel-off force ≤ 70 g.f

Ⅱ. Measurement Method

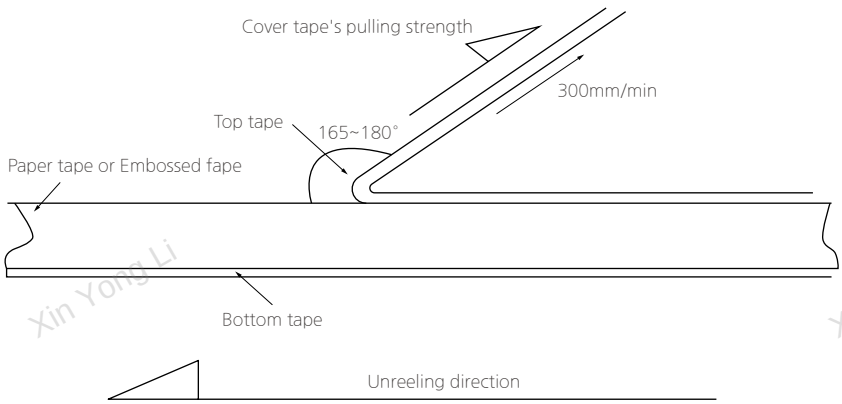

- Taping Packaging design : Packaging design follows IEC 60286-3 standard.
  (IEC 60286-3 Packaging of components for automatic handling - parts 3)
  * If the static electricity of SMT process causes any problems, please contact us.

Packaging Specifications

Xin Yong Li

5 BOX package

Ⅰ. Packaging Label

REEL & Box Type
Label includes the information as below.

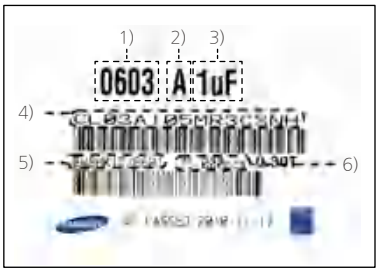

1) Chip size
2) Temperature Characteristics
3) Nominal Capacitance
4) Model Name
5) LOT Number & Reel Number
6) Q'ty

Ⅱ. Box Packaging

1) Double packaging with the paper type of inner box and outer box.
2) Avoid any damages during transportation by car, airplane and ship.
3) Remark information of contents on inner box and outer box

※ If special packaging is required, please contact us.

Ⅲ. 7" Box packaging

(Unit : mm)

■ Inner Box (7" × 5 REEL)

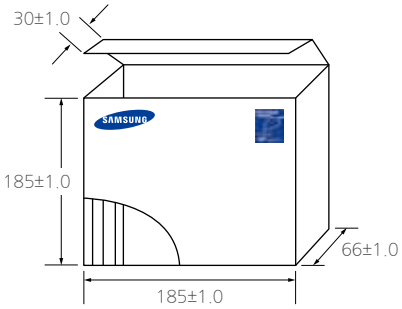

■ Inner Box (7" × 10 REEL)

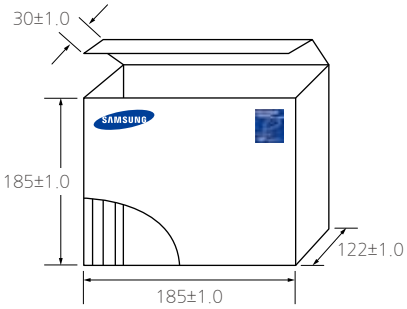

■ Outer Box (7" × 20 REEL)

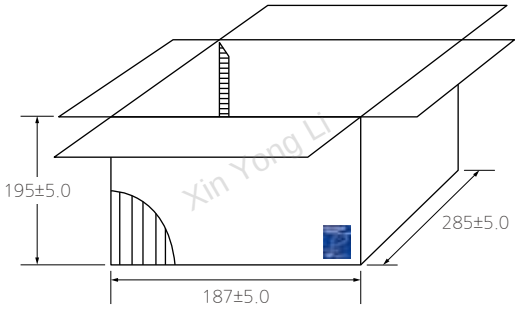

■ Outer Box (7" × 60 REEL)

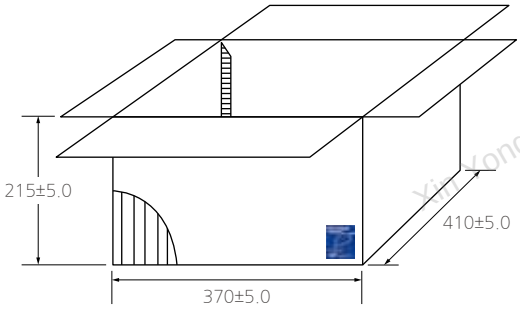

Packaging Specifications

Xin Yong Li

Ⅳ. 13" Box packaging

■ Inner Box (13" × 4 REEL)

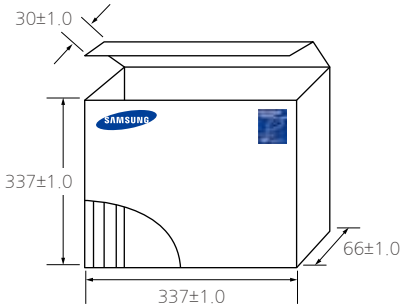

■ Outher Box (13" × 20 REEL)

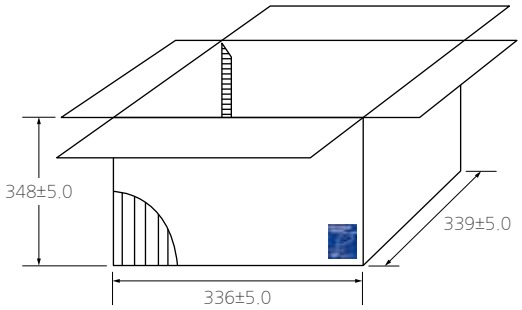

6 Chip Weight

Size (L/W) mm (inch)	Size (T) (mm)	Temp	Weight (mg/pc)
0402 (01005)	0.20	C0G	0.082
	0.20	X7R	0.083
	0.20	X5R	0.093
1005 (0402)	0.50	C0G	1.182
	0.50	X7R	1.559
	0.50	X5R	1.56
2012 (0805)	0.65	C0G	7.192
	1.25	X7R	16.523
	1.25	X5R	16.408
3225 (1210)	2.50	X7R	116.197
	2.50	X5R	121.253
4532 (1812)	1.25	X7R	96.697
0603 (0201)	0.30	C0G	0.233
	0.30	X7R	0.285
	0.30	X5R	0.317
1608 (0603)	0.80	C0G	4.615
	0.80	X7R	5.522
	0.80	X5R	5.932
3216 (1206)	1.25	C0G	28.086
	1.60	X7R	54.05
	1.60	X5R	45.6
4520 (1808)	1.25	C0G	47.382
	1.25	X7R	63.136
5750 (2220)	1.60	X7R	260.897

※ The weight of product is typical value per size, for more details, please contact us.

Caution/Notice

Xin Yong Li

Product Characteristic data

1 Capacitance

The capacitance is the ratio of the change in an electric charge according to voltage change.

Ⅰ. Measure capacitance with voltage and frequency specified in this document.
Regarding the voltage/frequency condition for capacitance measurement of each MLCC model, please make sure to follow a section "C. Reliability test Condition - Capacitance" in this document.

The following table shows the voltage and frequency condition according to the capacitance range.
[The voltage and frequency condition according to MLCC the capacitance range]

Class Ⅰ

Capacitance	Frequency	Voltage
≤1,000pF	1㎒±10%	0.5~5Vrms
>1,000pF	1㎑±10%	

Class Ⅱ

Capacitance	Frequency	Voltage
≤10μF	1㎑±10%	1.0±0.2Vrms
>10μF	120Hz±20%	0.5±0.1Vrms
Exception	1㎑±10%	0.5±0.1Vrms

※ Capacitance shall be measured after the heat treatment of 150+0/-10℃ for 1hr, leaving at room temperature for 24±2hr. (Class Ⅱ)

Ⅱ. It is recommended to use measurement equipment with the ALC (Auto Level Control) option.
The reason is that when capacitance or measurement frequency is high, the output voltage of measurement equipment can be lower than the setting voltage due to the equipment limitation. Note that when capacitance or measurement frequency is excessively high, the measurement equipment may show ALC off warning and provide a lower output voltage than the setting voltage even with ALC option selected. It is necessary to ensure the output voltage of measurement equipment is the same as the setting voltage before measuring capacitance.

Ⅲ. Capacitance value of high dielectric constant (Class Ⅱ) MLCC changes with applied AC and DC voltage. Therefore, it is necessary to take into account MLCC's AC voltage characteristics and DC-bias voltage characteristics when applying MLCC to the actual circuit.

Ⅳ. The capacitance is in compliance with the EIA RS-198-1-F-2002.

2 Tan δ (DF)

Ⅰ. An ideal MLCC's energy loss is zero, but real MLCC has dielectric loss and resistance loss of electrode. DF (Dissipation Factor) is defined as the ratio of loss energy to stored energy and typically being calculated as percentage.

Ⅱ. Quality factor (Q factor) is defined as the ratio of stored energy to loss energy. The equation can be described as 1/DF. Normally the loss characteristic of Class Ⅰ MLCC is presented in Q, since the DF value is so small whereas the loss characteristic of Class Ⅱ MLCC is presented in DF.

Ⅲ. It is recommended to use Class Ⅰ MLCC for applications to require good linearity and low loss such as coupling circuit, filter circuit and time constant circuit.

Caution/Notice

Xin Yong Li

3 Insulation Resistance

Ceramic dielectric has a low leakage current with DC voltage due to the high insulating properties.
Insulation resistance is defined as the ratio of a leakage current to DC voltage.

Ⅰ. When applying DC voltage to MLCC, a charging current and a leakage current flow together at the initial stage of measurement.

While the charging current decreases, and insulation resistance (IR) in MLCC is saturated by time.
Therefore, insulation resistance shall be measured 1 minute after applying the rated voltage.

4 Capacitance Aging

The aging characteristic is that the high dielectric (ClassⅡ) MLCC decreases capacitance value over time. It is also necessary to consider the aging characteristic with voltage and temperature characteristics when ClassⅡ MLCC is used in circuitry.

Ⅰ. In general, aging causes capacitance to decrease linearly with the log of time as shown in the following graph. Please check with SEMCO for more details, since the value may vary between different models.

Ⅱ. After heat treatment (150 °C, 1hour), the capacitance decreased by aging is recovered, so aging should be considered again from the time of heat treatment.

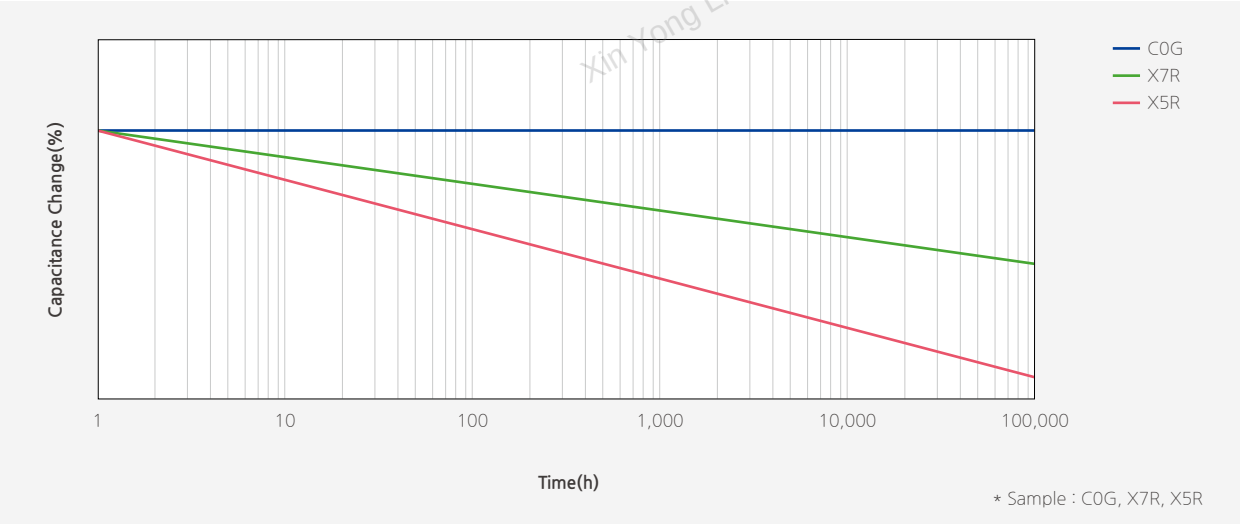

[Example of Capacitance Aging]

Caution/Notice

Xin Yong Li

5 Temperature Characteristics of Capacitance (TCC)

Please consider temperature characteristics of capacitance since the electrical characteristics such as capacitance changes which is caused by a change in ceramic dielectric constant by temperature.

Ⅰ. It is necessary to check the values specified in section "C. Reliability test Condition-Temperature Characteristics" for the temperature and capacitance change range of MLCC.

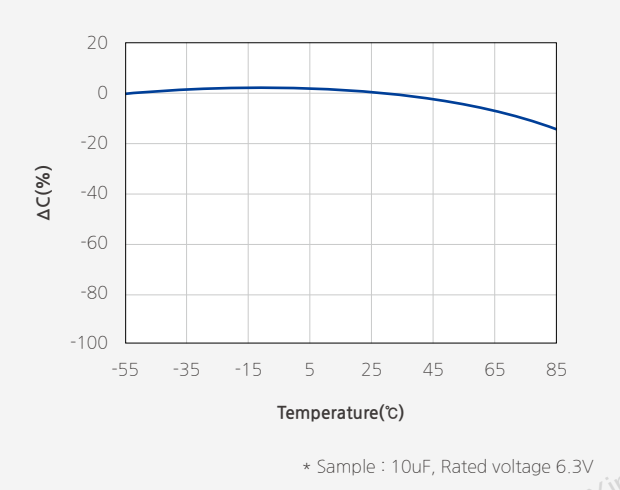

[Example of Temperature Characteristics (X5R)]

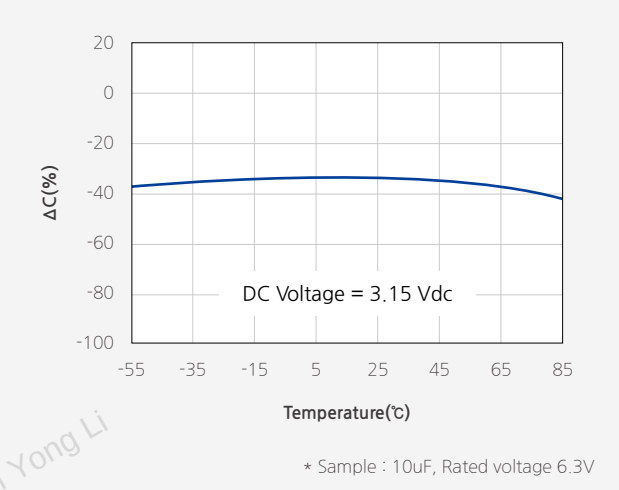

[Example of Bias TCC]

Ⅱ. When selecting MLCC, it is necessary to consider the heat characteristics of a system, room temperature and TCC of MLCC, since the applied temperature may change the capacitance of MLCC.

Ⅲ. In addition, Bias TCC of MLCC should be taken into account when DC voltage is applied to MLCC.

6 Self-heating Temperature

It is necessary to design the system, with considering self-heating generated by the ESR (Equivalent Series Resistance) of MLCC when AC voltage or pulse voltage is applied to MLCC.

Ⅰ. When MLCC is used in an AC voltage or pulse voltage circuit, self-heating is generated when AC or pulse current flows through MLCC. Short-circuit may be occurred by the degradation of MLCC's insulating properties.

Ⅱ. The reliability of MLCC may be affected by MLCC being used in an AC voltage or pulse voltage circuit, even the AC voltage or the pulse voltage is within the range of rated voltage. Therefore, make sure to check the following conditions.

1) The surface temperature of MLCC must stay within the maximum operating temperature after AC or Pulse voltage is applied.
2) The rise in increase by self-heating of MLCC must not exceed 20℃

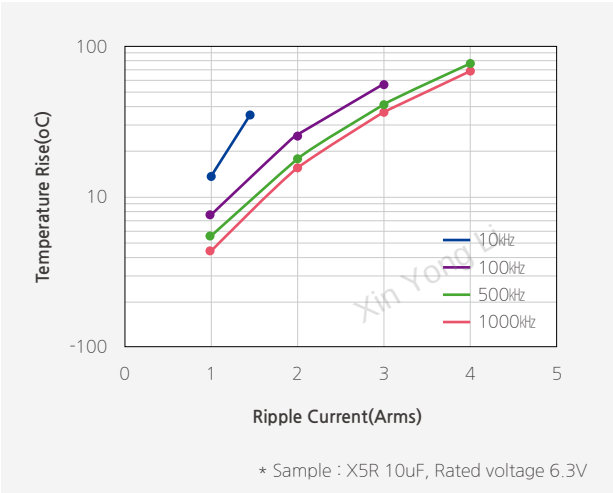

[Example of Ripple current]

Caution/Notice

Xin Yong Li

7 DC & AC Voltage Characteristics

It is required to consider voltage characteristics in the circuit since the capacitance value of high dielectric constant MLCC (ClassⅡ) is changed by applied DC & AC voltage.

Ⅰ. Please ensure the capacitance change is within the allowed operating range of a system. In particular, when high dielectric constant type MLCC (ClassⅡ) is used in circuit with narrow allowed capacitance tolerance, a system should be designed with considering DC voltage, temperature characteristics and aging characteristics of MLCC.

Ⅱ. It is necessary to consider the AC voltage characteristics of MLCC and the AC voltage of a system, since the capacitance value of high dielectric constant type MLCC (ClassⅡ) varies with the applied AC voltage.

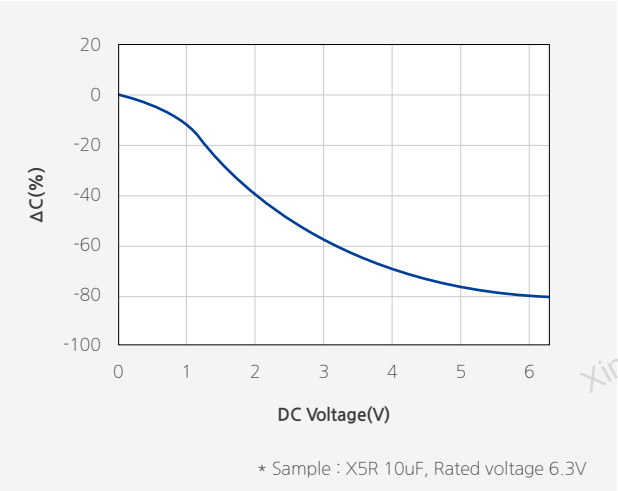

[Example of DC Bias characteristics]

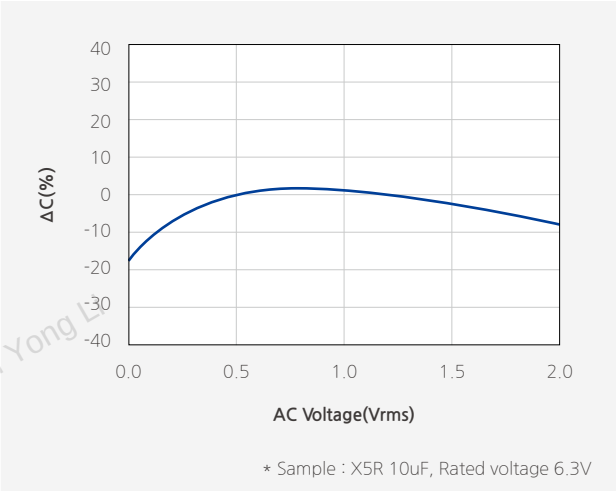

[Example of AC voltage characteristics]

Caution/Notice

Xin Yong Li

8 Impedance Characteristic

Electrical impedance (Z) of MLCC is the measurement of the opposition that MLCC presents to a current (I) when a voltage (V) is applied. It is defined as the ratio of the voltage to the current (Z=V/I).
Impedance extends the concept of resistance to AC circuits and is a complex number consisting of the real part of resistance (R) and the imaginary part of reactance (X) as Z=R+jX.
Therefore, it is required to design circuit with consideration of the impedance characteristics of MLCC based on the frequency (Z=R+jX)

Ⅰ. MLCC operates as a capacitor in the low frequency and its reactance (XC) decreases as frequency increases ($X_C=1/j2\pi fC$) where f is frequency and C is capacitance.
The resistance (ESR; Equivalent Series Resistance) of MLCC in the low frequency mainly comes from the loss of its dielectric material.

Ⅱ. MLCC operates as an inductor in the high frequency and the inductance of MLCC is called ESL (Equivalent Series Inductance). The reactance (XL) of MLCC in the high frequency increases as frequency increases ($X_L=j2\pi f\cdot ESL$). The resistance (ESR) of MLCC in the high frequency mainly comes from the loss of its electrode metal.

Ⅲ. SRF (Self Resonant Frequency) of MLCC is the frequency where its capacitive reactance (XC) and inductive reactance(XL) cancel each other and the impedance of MLCC has only ESR at SRF.

Ⅳ. The impedance of MLCC can be measured by a network analyzer or an impedance analyzer. When using the network analyzer, please note that the small-signal input may lead to the impedance of low capacitance caused by the AC voltage characteristic of MLCC.

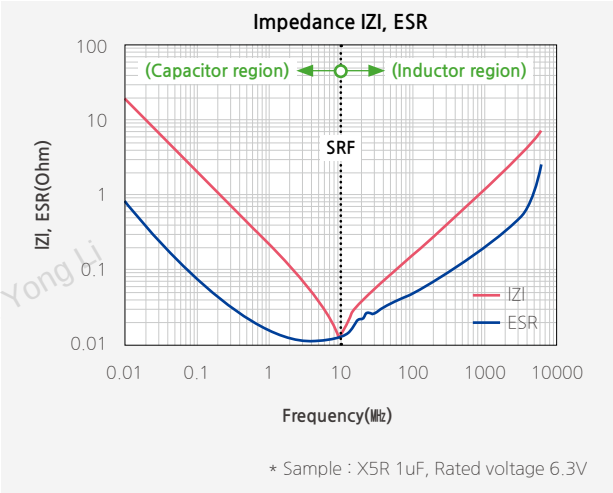

[Example of Impedance characteristics]

Caution/Notice

Xin Yong Li

Electrical & Mechanical Caution

1 Derating

MLCC with the test voltage at 100% of the rated voltage in the high temperature resistance test are labeled as "derated MLCC." For this type of MLCC, the voltage and temperature should be derated as shown in the following graph for the equivalent life time of a normal MLCC with the test voltage at 150% of the rated voltage in the high temperature resistance test.

Ⅰ. The derated MLCC should be applied with the derating voltage and temperature as shown in the following graph.

Ⅱ. The "Temperature of MLCC" in the x-axis of the graph below indicates the surface temperature of MLCC including self-heating effect. The "Voltage Derating Ratio" in the y-axis of the graph below gives the maximum operating voltage of MLCC with reference to the maximum voltage (Vmax) as defined in section "3-2. Applied Voltage."

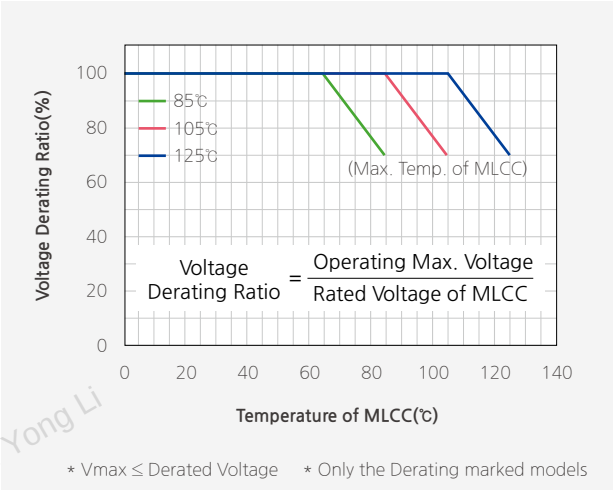

[Example of derating graph for derated MLCC]

2 Applied Voltage

The actual applied voltage on MLCC should not exceed the rated voltage set in the specifications.

Ⅰ. Cautions by types of voltage applied to MLCC

- For DC voltage or DC+AC voltage, DC voltage or the maximum value of DC + AC voltage should not exceed the rated voltage of MLCC.
- For AC voltage or pulse voltage, the peak-to-peak value of AC voltage or pulse voltage should not exceed the rated voltage of MLCC.
- Abnormal voltage such as surge voltage, static electricity should not exceed the rated voltage of MLCC.

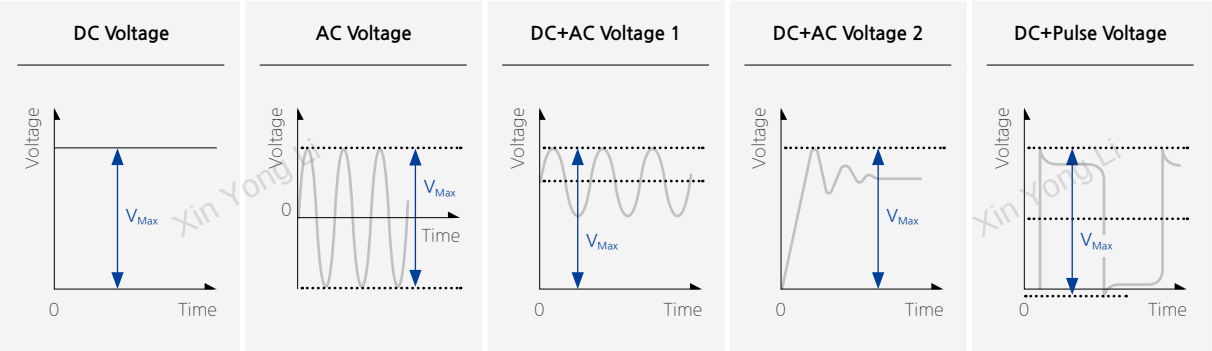

[Types of Voltage Applied to the Capacitor]

Caution/Notice

Xin Yong Li

Ⅱ. Effect of EOS (Electrical Overstress)

- Electrical Overstress such as a surge voltage or EOS can cause damages to MLCC, resulting in the electrical short failure caused by the dielectric breakdown in MLCC.
- Down time of MLCC is varied with the applied voltage and the room temperature and a dielectric shock caused by EOS can accelerate heating on the dielectric. Therefore, it can bring about a failure of MLCC in a market at the early stage.
- Please use caution not to apply excessive electrical overstress including spike voltage MLCC when preparing MLCC for testing or evaluating.

(1) Surge
When the overcurrent caused by surge is applied to MLCC, the influx of current into MLCC can induce the overshooting phenomenon of voltage as shown in the graph below and result in the electrical short failure in MLCC. Therefore, it is necessary to be careful to prevent the influx of surge current into MLCC.

(2) ESD (Electrostatic Discharge)
Since the voltage of the static electricity is very high but the quantity of electric charge is small compared to the surge, ESD can cause damage to MLCC with low capacitance as shown in the following graph, whereas surge with lots of electric charge quantity can cause damages to even high capacitance MLCC.

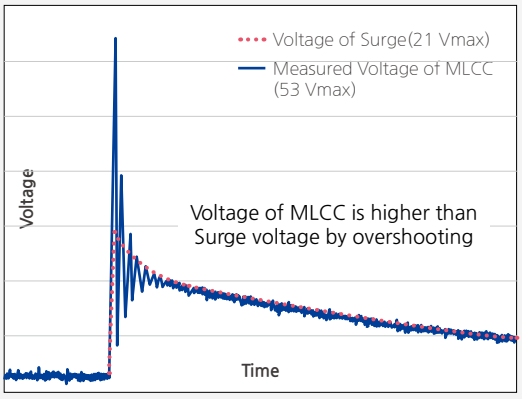

[Example of Surge applied to MLCC]

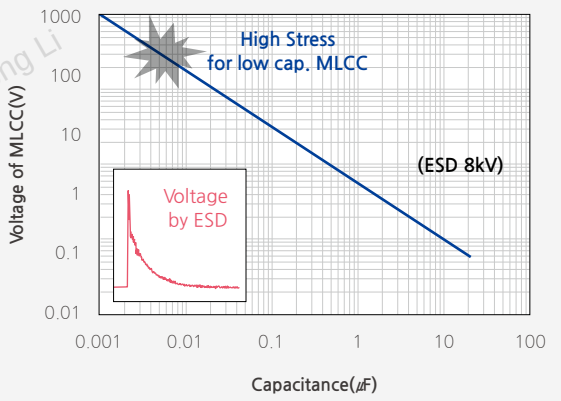

* Simulation for ESD 8kV

[Example of ESD applied to MLCC]

3 Vibration

Please check the types of vibration and shock, and the status of resonance. Manage. MLCC not to generate resonance and avoid any kind of impact to terminals. When MLCC is used in a vibration environment, please make sure to contact us for the situation and consider special MLCC such as Soft-term, etc.

4 Shock

Mechanical stress caused by a drop may cause damages to a dielectric or a crack in MLCC. Do not use a dropped MLCC to avoid any quality and reliability deterioration. When piling up or handling printed circuit boards, do not hit MLCC with the corners of a PCB to prevent cracks or any other damages to the MLCC.

5 Piezo-electric Phenomenon

MLCC may generate a noise due to vibration at specific frequency when using the high dielectric constant MLCC (Class Ⅱ) at AC or Pulse circuits. MLCC may cause a noise if MLCC is affected by any mechanical vibrations or shocks.

Caution/Notice

Xin Yong Li

Process of Mounting and Soldering

1 Mounting

MLCC with the test voltage at 100% of the rated voltage in the high temperature resistance test are labeled as "derated MLCC." For this type of MLCC, the voltage and temperature should be derated as shown in the following graph for the equivalent life time of a normal MLCC with the test voltage at 150% of the rated voltage in the high temperature resistance test.

Ⅰ. Mounting position

It is recommended to locate the major axis of MLCC in parallel to the direction in which the stress is applied.

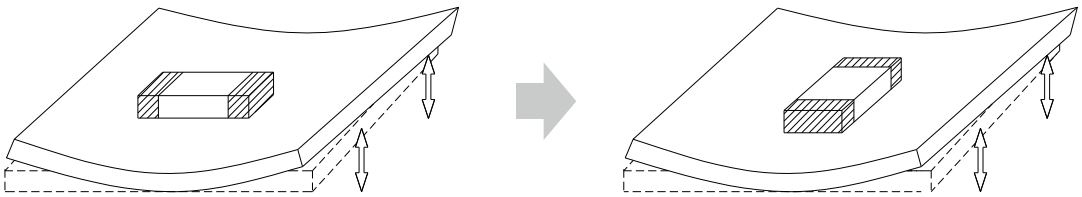

Not recommended　　Recommended

Ⅱ. Cautions during mounting near the cutout

Please take the following measures to effectively reduce the stress generated from the cutting of PCB. Select the mounting location shown below, since the mechanical stress is affected by a location and a direction of MLCC mounted near the cutting line.

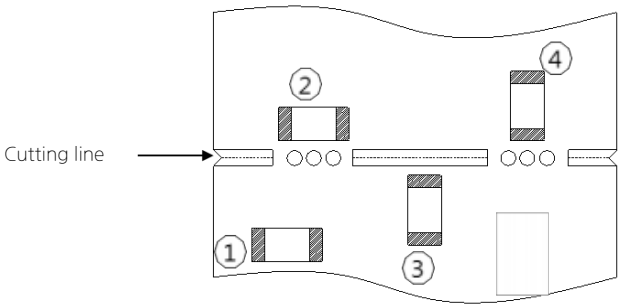

※ Relative mechanical stress
② > ①
③ > ①
④ > ①

Ⅲ. Cautions during mounting near screw

If MLCC is mounted near a screw hole, the board deflection may be occurred by screw torque. Mount MLCC as far from the screw holes as possible.

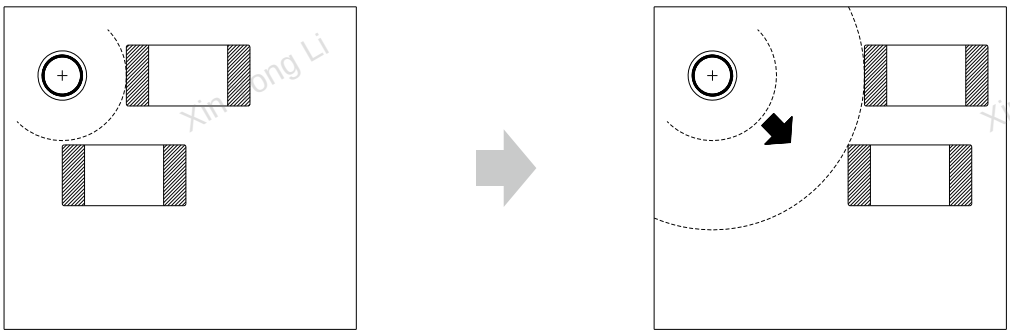

Not recommended　　Recommended

Caution/Notice

Xin Yong Li

2 Caution before Mounting

Ⅰ. It is recommended to store and use MLCC in a reel. Do not re-use MLCC that was isolated from the reel.

Ⅱ. Check the capacitance characteristics under actual applied voltage.

Ⅲ. Check the mechanical stress when actual process and equipment is in use.

Ⅳ. Check the rated capacitance, rated voltage and other electrical characteristics before assembly. Heat treatment must be done prior to measurement of capacitance.

Ⅴ. Check the solderability of MLCC that has passed shelf life before use.

Ⅵ. The use of Sn-Zn based solder may deteriorate the reliability of MLCC.

3 Cautions during Mounting with Mounting (pick-and-place) Machines

Ⅰ. Mounting Head Pressure

Excessive pressure may cause cracks in MLCC. It is recommended to adjust the nozzle pressure within the maximum value of 300g.f. Additional conditions must be set for both thin film and special purpose MLCC.

Ⅱ. Bending Stress

When using a two-sided substrate, it is required to mount MLCC on one side first before mounting on the other side due to the bending of the substrate caused by the mounting head.

Support the substrate as shown in the picture below when MLCC is mounted on the other side.
If the substrate is not supported, bending of the substrate may cause cracks in MLCC.

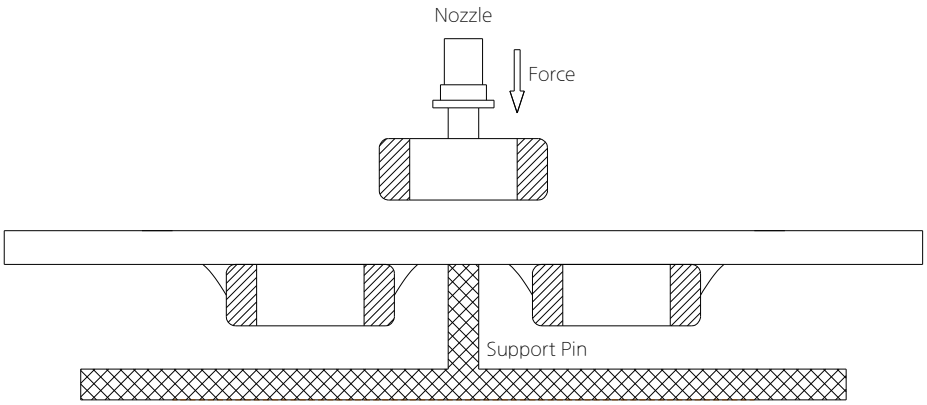

Ⅲ. Suction nozzle

Dust accumulated in a suction nozzle and suction mechanism can impede a smooth movement of the nozzle.
This may cause cracks in MLCC due to the excessive force during mounting.
If the mounting claw is worn out, it may cause cracks in MLCC due to the uneven force during positioning.
A regular inspection such as maintenance, monitor and replacement for the suction nozzle and mounting claw should be conducted.

Caution/Notice

Xin Yong Li

4 Reflow soldering

MLCC is in a direct contact with the dissolved solder during soldering, which may be exposed to potential mechanical stress caused by the sudden temperature change.
Therefore, MLCC may be contaminated by the location movement and flux.
For the reason, the mounting process must be closely monitored.

Method		Classification
Reflow soldering	Overall heating	Infrared rays
		Hot plate
		VPS(Vapor phase)
	Local heating	Air heater
		Laser
		Light beam

Ⅰ. Reflow Profile

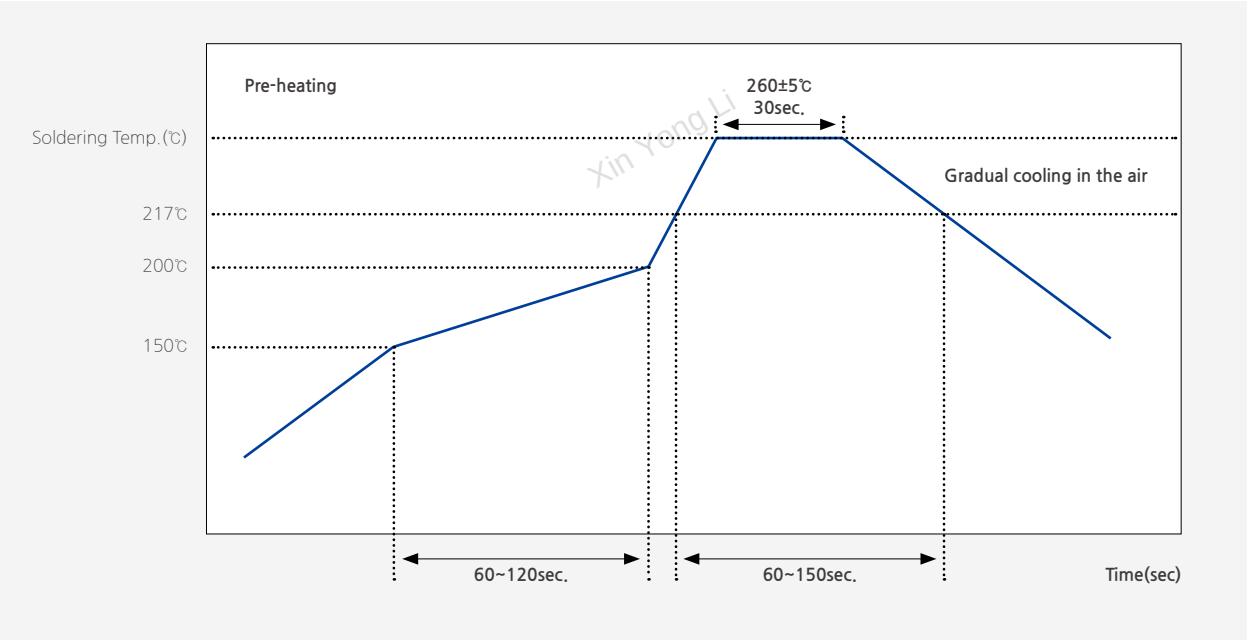

[Reflow Soldering Conditions]

Use caution not to exceed the peak temperature (260℃) and time (30sec) as shown.
Pre-heating is necessary for all constituents including the PCB to prevent the mechanical damages on MLCC. The temperature difference between the PCB and the component surface must be kept to the minimum.

As for reflow soldering, it is recommended to keep the number of reflow soldering to less than three times. Please check with us when the number of reflow soldering needs to exceed three times. Care must be exercised especially for the ultra-small size, thin film and high capacitance MLCC as they can be affected by thermal stress more easily.

Caution/Notice

Xin Yong Li

Ⅱ. Reflow temperature

The following quality problem may occur when MLCC is mounted with a lower temperature than the reflow temperature recommended by a solder manufacturer. The specified peak temperature must be maintained after taking into consideration the factors such as the placement of peripheral constituent and the reflow temperature.

- Drop in solder wettability
- Solder voids
- Potential occurrence of whisker
- Drop in adhesive strength
- Drop in self-alignment properties
- Potential occurrence of tombstones

Ⅲ. Cooling

Natural cooling with air is recommended.

Ⅳ. Optimum solder flux for reflow soldering

- Overly the thick application of solder pastes results in an excessive solder fillet height.
- This makes MLCC more vulnerable to the mechanical and thermal stress from the board, which may cause cracks in MLCC.
- Too little solder paste results in a lack of the adhesive strength, which may cause MLCC to isolate from PCB
- Check if solder has been applied uniformly after soldering is completed.

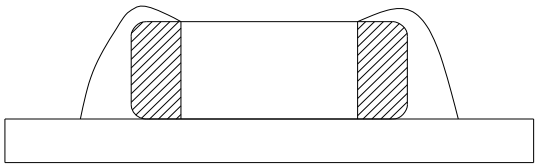

Too Much Solder
large stress may cause cracks

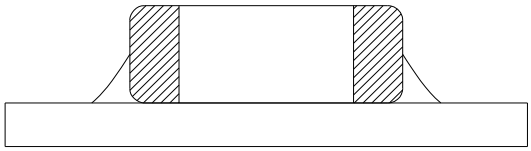

Not enough solder
Weak holding force may cause bad connections or detaching of the capacitor

- It is required to design a PCB with consideration of a solder land pattern and its size to apply an appropriate amount of solder to MLCC. The amount of the solder at the edge may impact directly on cracks in MLCC.
- The design of a suitable solder land is necessary since the more the solder amount is, the larger the force MLCC experiences and the higher the chance MLCC cracks.

Caution/Notice

5 Flow soldering

Ⅰ. Flow profile

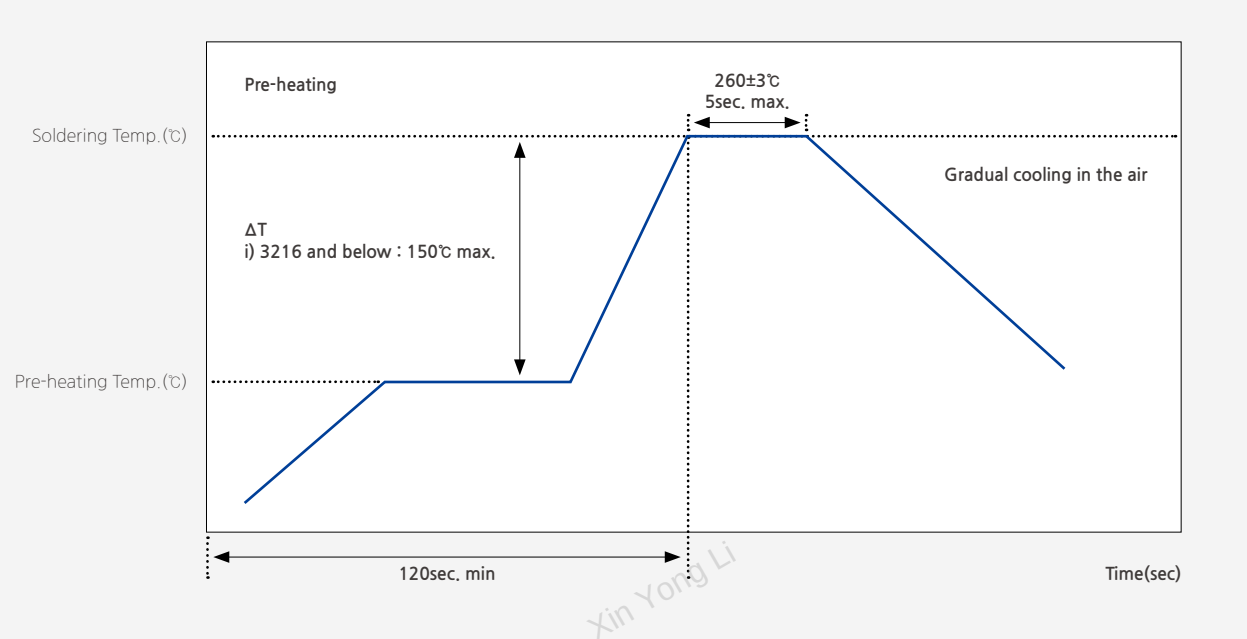

[Flow Soldering Conditions]

Take caution not to exceed peak temperature (260℃) and time (5sec) as shown.
Please contact us before use the type of high capacitance and thin film MLCC for some exceptions that may be caused.

Ⅱ. Caution before Flow soldering

- When a sudden heat is applied to MLCC, the mechanical rigidity of MLCC is deteriorated by the internal deformation of MLCC. Preheating all the constituents including PCB is required to prevent the mechanical damages on MLCC. The temperature difference between the solder and the surface of MLCC must be kept to the minimum.
- If the flow time is too long or the flow temperature is too high, the adhesive strength with PCB may be deteriorated by the leaching phenomenon of the outer termination, or the capacitance value may be dropped by weak adhesion between the internal termination and the outer termination.

Xin Yong Li

Caution/Notice

Xin Yong Li

6 Soldering Iron

Manual soldering can pose a great risk on creating thermal cracks in MLCC. The high temperature soldering iron tip may come into a direct contact with the ceramic body of MLCC due to the carelessness of an operator. Therefore, the soldering iron must be handled carefully, and close attention must be paid to the selection of the soldering iron tip and to temperature control of the tip.

Ⅰ. How to use a soldering Iron

- In order to minimize damages on MLCC, preheating MLCC and PCB is necessary.
- A hot plate and a hot air type preheater should be used for preheating
- Do not cool down MLCC and PCB rapidly after soldering.
- Keep the contact time between the outer termination of MLCC and the soldering iron as short as possible. Long soldering time may cause problems such as adhesion deterioration by the leaching phenomenon of the outer termination.

Variation of Temp.	Soldering Temp.(℃)	Pre-heating Time(sec)	Soldering Time(sec)	Cooling Time(sec)
ΔT≤130	300±10℃ max	≥60	≤4	-

* Control Δ T in the solder iron and preheating temperature.

Condition of Iron facilities		
Wattage	Tip diameter	Soldering time
20W max	3㎜ max	4sec max

* Caution - Iron tip should not contact with ceramic body directly
Lead-free solder: Sn-3.0Ag-0.5CU

Ⅱ. How to use a spot heater

Compared to local heating using a solder iron, heat by a spot heater heats the overall MLCC and the PCB, which is likely to lessen the thermal shocks.
For a high density PCB, a spot heater can prevent the problem to connect between a solder iron and MLCC directly.

- If the distance from the air nozzle outlet to MLCC is too close, MLCC may be cracked due to the thermal stress. Follow the conditions set in the table below to prevent this problem.
- The spot heater application angle as shown in the figure is recommended to create a suitable solder fillet shape.
- In case that heat of higher than 350℃ is applied to MLCC containing epoxy material, the epoxy material in MLCC may be damaged by heat.

Distance	≥ 5㎜
Hot Air Application angle	45℃
Hot Air Temperature Nozzle Outlet	≤ 400℃
Application Time	≤ 10s

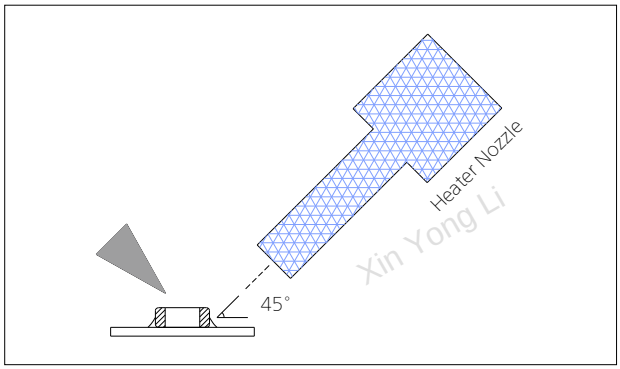

Caution/Notice

Xin Yong Li

Ⅲ. Cautions for re-work

- Too much solder amount will increase the risk of PCB bending or cause other damages.
- Too little solder amount will result in MLCC breaking loose from the PCB due to the inadequate adhesive strength.
- Check if the solder has been applied properly and ensure the solder fillet has a proper shape.

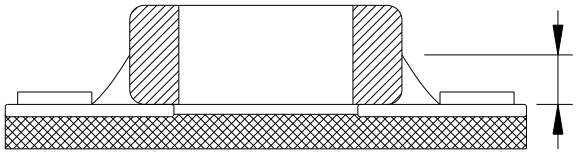

* Soldering wire below ø0.5mm is required for soldering.

7 Cleaning

Ⅰ. In general, cleaning is unnecessary if rosin flux is used.
When acidic flux is used strongly, chlorine in the flux may dissolve into some types of cleaning fluids, thereby affecting the performance of MLCC.
This means that the cleansing solution must be carefully selected and should always be new.

Ⅱ. Cautions for cleaning

MLCC or solder joint may be cracked with the vibration of PCB, if ultrasonic vibration is too strong during cleaning. When high pressure cleaning equipment is used, test should be done for the cleaning equipment and its process before the cleaning in order to avoid damages on MLCC.

8 Cautions for using electrical measuring probes

- Confirm the position of the support pin or jig when checking the electrical performance of MLCC after mounting on the PCB.
- Watch for PCB bending caused by the pressure of a test-probe or other equipment.
- If the PCB is bent by the force from the test probe, MLCC may be cracked or the solder joint may be damaged.
- Avoid PCB flexing by using the support pin on the back side of the PCB.
- Place equipment with the support pin as close to the test-probe as possible.
- Prevent shock vibrations of the board when the test-probe contacts a PCB.

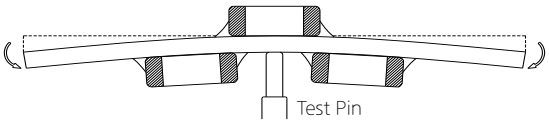

Not recommended

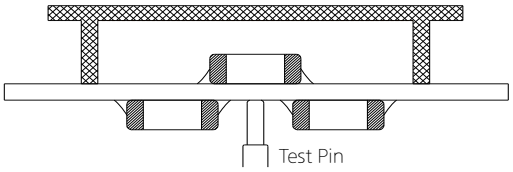

Recommended

Caution/Notice

Xin Yong Li

9 Printed Circuit Board Cropping

- Do not apply any stress to MLCC such as bending or twisting the board after mounting MLCC on the PCB.
- The stress as shown may cause cracks in MLCC when cutting the board.
- Cracked MLCC may cause degradation to the insulation resistance, thereby causing short circuit.
- Avoid these types of stresses applied to MLCC.

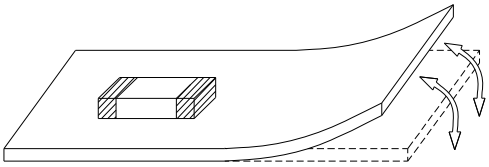

[Bending]

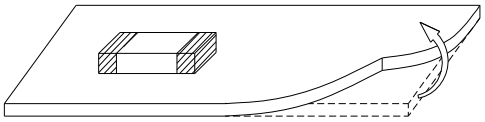

[Twisting]

Ⅰ. Cautions for cutting PCB

Check a cutting method of PCB in advance.

The high density board is separated into many individual boards after the completion of soldering.
If the board is bent or deformed during separation, MLCC may be cracked.
Carefully select a separation method that minimizes the deformation of the PCB.

10 Assembly Handling

Ⅰ. Cautions for PCB handling

Hold the edges of the board mounted with MLCC with both hands since holding with one hand may bend the board.
Do not use dropped boards, which may degrade the quality of MLCC.

Ⅱ. Mounting other components

Pay attention to the following conditions when mounting other components on the back side of The board after MLCC has been mounted on the front side.
When the suction nozzle is placed too close to the board, board deflection stress may be applied to MLCC on the back side, resulting in cracks in MLCC.
Check if proper value is set on each chip mounter for a suction location, a mounting gap and a suction gap by the thickness of components.

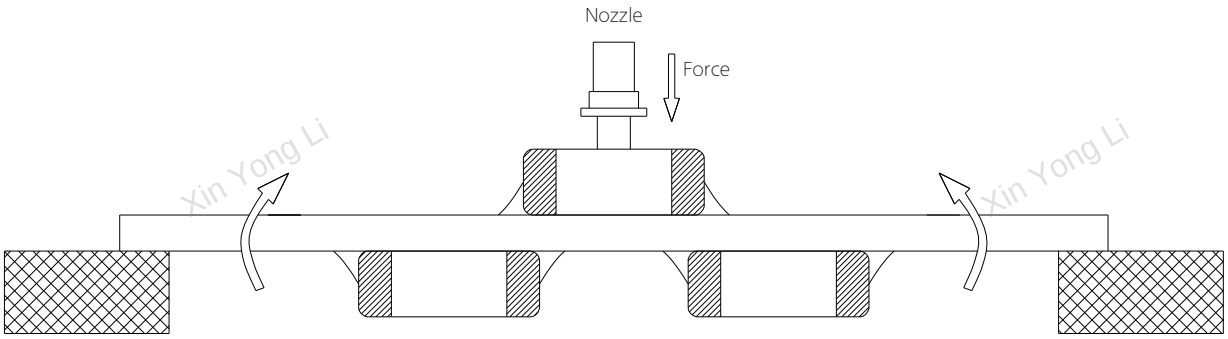

Caution/Notice

Xin Yong Li

Ⅲ. Board mounting components with leads

If the board is bent when inserting components (transformer, IC, etc.) into it, MLCC or solder joint may be cracked. Pay attention to the following:

- Reduce the stress on the board during insertion by increasing the size of the lead insertion hole.
- Insert components with leads into the board after fixing the board with support pins or a dedicated jig.
- Support the bottom side of the board to avoid bending the board.
- Check the status of the height of each support pin regularly when the support pins are used.

Not recommended

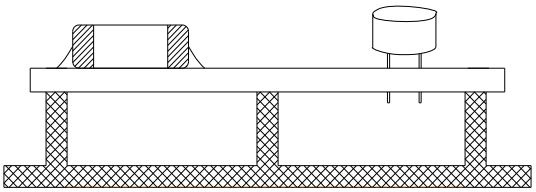

Recommended

Ⅳ. Socket and / or connector attach / detach

Since the insertion or removal from sockets and connectors may cause the board to bent, make sure that MLCC mounted on the board should not be damaged in this process.

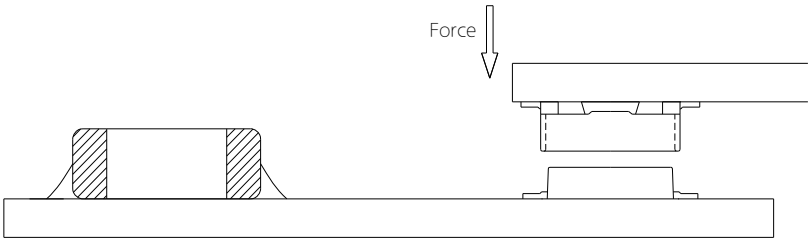

Ⅴ. Fastening screw

When attaching a shield on a board, the board may be bent during a screw tightening work.

Pay attention to the following conditions before performing the work.

- Plan the work to prevent the board from bending.
- Use a torque driver to prevent over-tightening of the screw.
- Since the board may be bent by soldering, use caution in tightening the screw.

Caution/Notice

Xin Yong Li

11 Adhesive selection

Pay attention to the following if an adhesive is used to position MLCC on the board before soldering.

Ⅰ. Requirements for Adhesives

- They must have enough adhesive strength to prevent MLCC from slipping or moving during the handling the board.
- They must maintain their adhesive strength when exposed to soldering temperatures.
- They should not spread when applied to the PCB.
- They should have a long pot life.
- They should hardened quickly.
- They should not corrode the board or MLCC materials.
- They should be an insulator type that does not affect the characteristic of MLCC.
- They should be non-toxic, not harmful, and particularly safe when workers touch the adhesives.

Ⅱ. Caution before Applying Adhesive

Check the correct application conditions before attaching MLCC to the board with an adhesive.
If the dimension of land, the type of adhesives, the amount of coating, the contact surface areas, the curing temperature, or other conditions are not appropriate, it may degrade the MLCC performance.

Ⅲ. Cautions for selecting Adhesive

Depending on the type of the chosen adhesive, MLCC insulation resistance may be degraded.
In addition, MLCC may be cracked by the difference in contractile stress caused by the different contraction rate between MLCC and the adhesive.

Ⅳ. Cautions for the amount of applied adhesive and curing temperature

- The inappropriate amount of the adhesive cause the weak adhesive strength, resulting in the mounting defect in MLCC.
- Excessive use of the adhesive may cause a soldering defect, loss of electrical connection, incorrect curing, or slippage of a mounting position, thereby an inflow of the adhesive onto the land section should be avoided.
- If the curing temperature is too high or the curing time is too long, the adhesive strength will be degraded. In addition, oxidation both on the outer termination (Sn) of MLCC and the surface of the board may deteriorate the solderability.

12 Flux

Ⅰ. The excessive amount of flux generates excessive flux gases which may deteriorate solderability. Therefore, apply the flux thin and evenly as a whole.

Ⅱ. Flux with a high ratio of halogen may oxidize the outer termination of MLCC, if cleaning is not done properly. Therefore, use flux with a halogen content of 0.1% max.

Ⅲ. Strong acidic flux can degrade the MLCC performance.

Ⅳ. Check the solder quality of MLCC and the amount of remaining flux surrounding MLCC after the mounting process.

Caution/Notice

Xin Yong Li

13 Coating

Ⅰ. Crack caused by Coating

A crack may be caused in the MLCC due to amount of the resin and stress of thermal contraction of the resin during coating process.
During the coating process, the amount of resin and the stress of thermal contraction of the resin may cause cracks in MLCC. The difference of thermal expansion coefficient between the coating, or a molding resin may cause destruction, deterioration of insulation resistance or dielectric breakdown of MLCC such as cracks or detachment, etc.

Ⅱ. Recommended Coating material

- A thermal expansion coefficient should be as close to that of MLCC as possible.
- A silicone resin can be used as an under-coating to buffer the stress.
- The resin should have a minimum curing contraction rate.
- The resin should have a minimum sensitivity (ex. Epoxy resin).
- The insulation resistance of MLCC can be deteriorated if a high hygroscopic property resin is used in a high humidity condition.
- Do not use strong acid substances due to the fact that coating materials inducing a family of halogen substances and organic acid may corrode MLCC.

Xin Yong Li

Design

1 Circuit design

When the board is dropped or bent, MLCC mounted on the board may be short-circuited by the drop in insulation resistance. Therefore, it is required to install safety equipment such as a fuse to prevent additional accidents when MLCC is short-circuited, otherwise, electric short and fire may occur. This product is not a safety guaranteed product..

2 PCB Design

Ⅰ. Unlike lead type components, SMD type components that are designed to be mounted directly on the board are fragile to the stress. In addition, they are more sensitive to mechanical and thermal stress than lead type components.

Ⅱ. MLCC crack by PCB material type

A great difference of the thermal expansion coefficient between PCB and MLCC causes thermal expansion and contraction, resulting in cracks in MLCC. Even though MLCC is mounted on a board with a fluorine resin or on a single-layered glass epoxy, cracks in MLCC may occur.

3 Design system evaluation

Ⅰ. Evaluate the actual design with MLCC to make sure there is no functional issue or violation of specifications of the finished goods.

Ⅱ. Please note that the capacitance may differ based on the operating condition of the actual system since Class 2 MLCC capacitance varies with applied voltage and temperature.

Ⅲ. Surge resistance must be evaluated since the excessive surge caused by the inductance of the actual system may apply to MLCC.

Ⅳ. Note the actual MLCC size and the termination shape.

Caution/Notice

4 Land dimension

The recommended land dimension is determined by evaluating the actual SET and a board.

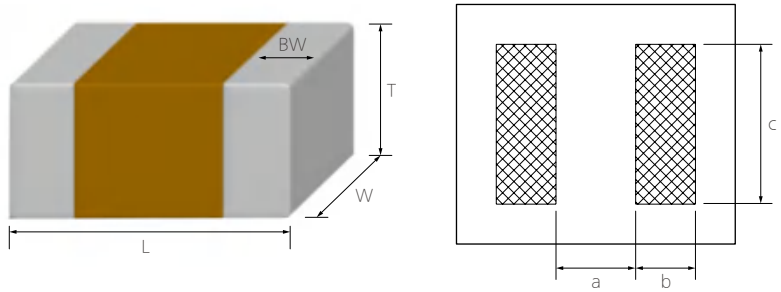

Reflow Footprint

Chip Size (mm)	Chip Tol. (mm)	a (mm)	b (mm)	c (mm)	(a+2b) min	(a+2b) max
0402	± 0.02	0.14~0.20	0.14~0.22	0.20~0.26	0.42	0.64
0603	± 0.03	0.16~0.20	0.24~0.32	0.30~0.35	0.64	0.84
	± 0.05	0.18~0.26	0.24~0.32	0.32~0.37	0.66	0.9
	± 0.07	0.20~0.28	0.25~0.35	0.35~0.39	0.7	0.98
	± 0.09	0.22~0.30	0.25~0.35	0.35~0.39	0.72	1
1005	± 0.05	0.35~0.40	0.37~0.47	0.50~0.55	1.09	1.34
	± 0.07	0.37~0.42	0.37~0.47	0.52~0.58	1.11	1.36
	± 0.10	0.40~0.45	0.37~0.47	0.55~0.60	1.14	1.39
	± 0.15	0.40~0.45	0.40~0.50	0.60~0.65	1.2	1.45
	± 0.20	0.45~0.50	0.40~0.50	0.65~0.70	1.25	1.5
	± 0.30	0.45~0.50	0.42~0.52	0.70~0.75	1.29	1.54
	± 0.40	0.50~0.55	0.45~0.55	0.75~0.80	1.4	1.65
1608	± 0.10	0.50~0.55	0.60~0.65	0.80~0.85	1.7	1.85
	± 0.15	0.55~0.60	0.62~0.67	0.85~0.90	1.79	1.94
	± 0.20	0.60~0.65	0.65~0.70	0.90~0.95	1.9	2.05
	± 0.25	0.65~0.70	0.70~0.75	0.95~1.00	2.05	2.2
	± 0.30	0.70~0.75	0.75~0.80	1.00~1.05	2.2	2.35
2012	±0.10	0.70~0.75	0.75~0.80	1.25~1.30	2.2	2.35
	±0.15	0.75~0.80	0.80~0.85	1.30~1.35	2.35	2.5
	±0.20	0.80~0.85	0.85~0.90	1.35~1.40	2.5	2.65
	±0.25	0.85~0.90	0.95~1.00	1.40~1.45	2.75	2.9
	±0.30	0.90~0.95	1.05~1.10	1.45~1.50	3	3.15
3216	±0.20	1.70~1.90	0.85~1.00	1.60~1.80	3.4	3.9
	±0.30	1.80~2.00	0.95~1.10	1.70~1.90	3.7	4.2
3225	-	2.00~2.40	1.00~1.40	1.80~2.20	4	5.2
4532	-	2.80~3.20	1.40~1.80	2.40~3.00	5.6	6.8
5750	-	4.00~4.60	1.70~2.30	4.10~4.90	7.4	9.2

Flow Footprint

Chip Size (mm)	Chip Tol. (mm)	a (mm)	b (mm)	c (mm)	(a+2b) min	(a+2b) max
1608	-	0.60~1.00	0.60~0.80	0.60~0.80	1.8	2.6
2012	-	1.00~1.20	0.80~1.20	0.80~1.20	2.6	3.6
3216	-	2.00~2.40	1.00~1.20	1.00~1.40	4	4.8

Xin Yong Li

Caution/Notice

Xin Yong Li

Others

1 Storage environment

Ⅰ. Recommendation for temperature/humidity

Even taping and packaging materials are designed to endure a long-term storage, they should be stored with a temperature of 0~40°C and an RH of 0~70% otherwise, too high temperatures or humidity may deteriorate the quality of the product rapidly.

As oxidization is accelerated when relative humidity is above 70%RH, the lower the humidity is, the better the solderability is. As the temperature difference may cause dew condensation during the storage of the product, it is a must to maintain a temperature control environment.

Ⅱ. Shelf Life

An allowable storage period should be within 6 months from the outgoing date of delivery in consideration of solderability. As for products in storage over 6 months, please check solderability before use.

2 Caution for corrosive environment

As corrosive gases may deteriorate the solderability of MLCC outer termination, it is a must to store MLCC in an environment without gases. MLCC that is exposed to corrosive gases may cause its quality issues due to the corrosion of plating layers and the penetration of moisture.

3 Equipment in operation

Ⅰ. Do not touch MLCC directly with bare hands to prevent an electric shock or damage.

Ⅱ. The termination of MLCC shall not be contacted with a conductive object (short -circuit). Do not expose MLCC to conductive liquid containing acidic or alkaline material.

Ⅲ. Do not use the equipment in the following conditions.

(1) Exposure to water or oil
(2) Exposure to direct sunlight
(3) Exposure to Ozone or ultra-violet radiation.
(4) Exposure to corrosive gas (e.g. hydrogen sulfide, sulfur dioxide, chlorine, ammonia gas)
(5) Exposure to vibration or mechanical shock exceeding specified limit
(6) Exposure to high humidity

Ⅳ. If the equipment starts generating any smoke, fire or smell, immediately switch it off or unplug from the power source. If the equipment is not switched off or unplugged, serious damage may occur due to the continuous power supply. Please be careful with the high temperature in this condition.

4 Waste treatment

In case of scrapping MLCC, it is incinerated or buried by a licensed industrial waste company. When scrapping MLCC, it is recommended to incinerate or bury the scrappage by a licensed industrial waste company.

Caution/Notice

Xin Yong Li

5 Operating temperature

The operating temperature limit is determined by the specification of each models.

Ⅰ. Do not use MLCC over the maximum operating temperature.
Pay attention to equipment's temperature distribution and the seasonal fluctuation of ambient temperature.

Ⅱ. The surface temperature of MLCC cannot exceed the maximum operating temperature including self-heating effects.

6 Transportation

The performance of MLCC may be affected by transportation conditions.

Ⅰ. MLCC shall be protected from excessive temperature, humidity and a mechanical force during transportation.
During transportation, the cartons shall not be deformed and the inner packaging shall be protected from excessive external forces.

Ⅱ. Do not apply excessive vibrations, shocks or excessive forces to MLCC.

- If excessive mechanical shock or stress are applied, MLCC's ceramic body may crack.
- When the surface of MLCC is hit with the sharp edge of an air driver, a soldering iron, or a tweezer, etc, MLCC may crack or become short-circuited.

Ⅲ. MLCC may crack and become non-functional due to the excessive shocks or dropping during transportation.

7 Notice

Some special products are excluded from this document.
Please be advised that this is a standard product specification for a reference only.
We may change, modify or discontinue the product specifications without notice at any time.
So, you need to approve the product specifications before placing an order.
Should you have any question regarding the product specifications, please contact our sales personnel or application engineers.

Component sales offices

Xin Yong Li

Head Office

150, Maeyeong-ro, Yeongtong-gu, Suwon-si, Gyeonggi-do, Republic of Korea
Tel +82-31-210-5114 (Main Number)

America

San Jose
Samsung Electro Mechanics America Inc. (HQ)
3655 N 1st street, San Jose CA 95134, U.S.A.
Tel +1-408-544-5454

San Diego
Samsung Electro Mechanics America Inc.(San Diego office)
5405 Morehouse Drive, Suite #220 San Diego CA 92121 USA
Te +1-858-263-3024

Phoenix
Samsung Electro Mechanics America Inc.(Phoenix Office)
4505 E Chandler Blvd suite #105, Phoenix, AZ, 85048, U.S.A.
Tel +1-480-592-0184

Detroit
Samsung Electro Mechanics America Inc. (Detroit Office)
4121 N Atlantic Blvd Auburn Hills Michigan 48326, U.S.A.

Europe

Frankfurt
Samsung Electro-Mechanics GmbH. (HQ)
Koelner Str. 12, 65760 Eschborn, Germany.
Tel +49-6196-66-3300

Munich
Samsung Electro-Mechanics GmbH. (Munich Office)
Reichenbachstrasse 2, 85737 Ismaning, Germany.
Tel +49-6196-66-7237

Stuttgart
Samsung Electro-Mechanics GmbH. (Stuttgart Office)
Leitzstrasse 45, 70469 Stuttgart, Germany.
Tel +49-7114-906-6281

Helsinki
Samsung Electro-Mechanics GmbH. (Helsinki Office)
Keilaranta 1, 02150 Espoo, Finland.
Tel +35-898-53-1132

Asia

Shenzhen
Samsung Electro-Mechanics (ShenZhen) Co.,Ltd.(HQ)
14F, Tower A, SCC Building, Junction of Houhai Blvd. and Haide 1st Rd., Nanshan Dist., Shenzhen City, China.
Tel +86-755-8608-5574

Shanghai
Samsung Electro-Mechanics Co.,Ltd. (Shanghai Branch)
13F Room 1301-1302, Tower B, SOHO Zhongshan Building, No.1065 Zhongshan West Rd., Changning Dist., Shanghai City, China.
Tel +86-21-2501-5803

Beijing
Samsung Electro-Mechanics Co.,Ltd. (Beijing Branch)
21F 2101-3, Samsung Tower, Building 1,Yard31, Jinghui Street,Chaoyang Dist, Beijing City, China.
Tel +86-10-5092-8701

Taipei
Samsung Electro-Mechanics Co.,Ltd. (Taipei Branch)
9F-1, No.399 Rueykuang Rd., Neihu Dist., Taipei City, Taiwan.
Tel +886-2-2656-8351

Singapore
Samsung Electro-Mechanics Private Limited(HQ)
3 Church Street Samsung Hub #23-01 Singapore.
Tel +65-6933-2600

Penang
Samsung Electro-Mechanics Private Limited(Penang Office)
Unit 9-06, Menara Boustead, 39 Jalan Sultan Ahmad Shah, 10050, Georgetown, Penang, Malaysia.
Tel +60-4-818-3912

New Delhi
Samsung Electro-Mechanics Private Limited(New Delhi Office)
G-4, Ground Floor Salcon Aurum Building, Jasola New Delhi-110025, India.
Tel +91-956-005-0310

Tokyo
Samsung Electro-Mechanics Japan Co., Ltd(HQ)
Shinagawa Grand Central Tower 9F, 2-16-4, Kounan, Minato-ku, Tokyo, Japan.
Tel +81-3-6369-6461

Manufacturing sites

Xin Yong Li

Suwon Plant (HQ)
150, Maeyeong-ro, Yeongtong-gu, Suwon-si, Gyeonggi-do, Republic of Korea
Tel +82-31-210-5114 (Main Number)

Busan Plant
333, Noksansaneopjung-ro, Gangseo-gu, Busan, Republic of Korea
Tel +82-31-210-5114 (Main Number)

China Tianjin
80, Xiaqing road, TEDA west district, Tianjin, China
Tel +86-6686-3333 (1120, 3620)

Philippines
BLK 5&6 Calamba Premiere International Park Brgy. Batino Calamba, Laguna Philippines
Tel +63-49-508-8300

SAMSUNG
ELECTRO-MECHANICS

Xin Yong Li

www.samsungsem.com