序号 No	目 录 TABLE OF CONTENTS
1	特征 Feature
2	应用范围 Application
3	型号表示法 Ordering Code
4	产品结构 Product Structure
5	产品尺寸 Product Dimensions
6	温度系数/特性 Temperature Coefficient /Characteristics
7	容量范围及电压 Capacitance Range and Voltage
8	可靠性测试方法 Reliability Test Methods
9	包装 Package
10	储存方法 Storage Methods
11	使用前的注意事项 Precautions Before Use
12	推荐焊接温度曲线图 The temperature profile for soldering
13	修订履历 Revision History

XYL XYL XYL XYL XYL

■通用型系列片式陶瓷电容器
General Series Multi-layer Ceramic Capacitors

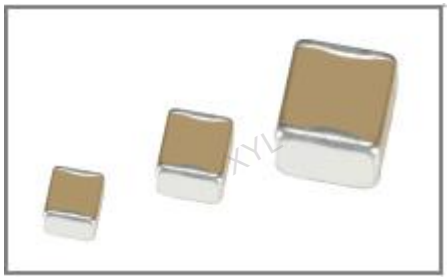

◆特征
Feature

*叠层独石结构，具有高可靠性能

There is high reliability on monolithic structure of laminated layers.

*具有优良的焊接与耐焊性能，适用于回流焊接与波峰焊接

And its character of excellent soldering ability and

soldering resistance ability is suitable for reflow soldering and peak soldering.

*具有较高的容量且容量性能稳定

It includes high and stable capacitance.

*高频类：此类介质材料的电容器为Ⅰ类电容器。其中 C0G、C0H 电容器电性能最稳定，几乎不随温度、电压和时间的变化而变化，适用于低损耗，稳定性要求高的高频电路。

High frequency Type:

This kind of dielectric material is considered as Class Ⅰ capacitor. C0G and C0H capacitors have the most stable electrical performance, which almost does not change with the change of temperature, Voltage or time, they are suitable for the low-loss and high stability requirement circuits.

*X7R、X7S、X7T、X6S、X6T、X5R、：此类介质材料的电容器为Ⅱ类电容器，具有较高的介电常数，容量比Ⅰ类电容器高，具有较稳定的温度特性，适用于容量范围广，稳定性要求不高的电路中，如隔直、耦合、旁路、鉴频等电路中。

X7R、X5R、X7S、X6S：X7R、X5R、 X7S、X6S material is a kind of material has high dielectric constant. The capacitor made of this kind material is considered as Class Ⅱ capacitor whose capacitance is higher than that of class Ⅰ. These capacitors are classified as having a semi-stable temperature characteristic and used over a wide temperature range, such in these kinds of circuits, DC-blocking, decoupling, bypassing, frequency discriminating etc.

执行标准：GB/T 21041-2007　GB/T 21042-2007

Executive Standard: GB/T 21041-2007　GB/T 21042-2007

◆应用范围
Application

*应用于各种滤波、耦合、谐振、旁路、高频电子线路

It is suitable for all kinds of filter, coupled, harmonic vibration, by passing and high frequency circuits.

◆型号表示法
How To Order

0805	CG	102	K	500	A	T

尺寸规格 Size Code		
尺寸代码 Size Code	EIA	长×宽 (L×W) mm
1005	01005	0.40×0.20
0201	0201	0.60×0.30
0402	0402	1.00×0.50
0603	0603	1.60×0.80
0805	0805	2.00×1.25
1206	1206	3.20×1.60
1210	1210	3.20×2.50
1808	1808	4.50×2.00
1812	1812	4.50×3.20

标称容量 Nominal Capacitance	
表示方式 Express Method	实际值 Actual Value
0R5	0.5
1R0	1.0
102	10×10^2

注：头两位数字为有效数字，第三位数字为 0 的个数；R 为小数点。
Note: the first two digits are significant; third digit denotes number of zeros; R=decimal point.

额定电压 Rated Voltage 单位(unit)：V	
表示方式 Express Method	实际值 Actual Value
6R3	6.3
500	50×10^0
201	20×10^1

注：头两位数字为有效数字，第三位数字为 0 的个数；R 为小数点。
Note: the first two digits are significant; third digit denotes number of zeros; R=decimal point.

包装方式 Package Styles	
表示方式 Express Method	包装方式 Package Styles
T	编带 7 寸盘包装 Braided 7 inch disc packing
D	编带 13 寸盘包装 Braided 13 inch disc packing

介质种类 Dielectric Code	
介质种类 Dielectric Code	介质材料 Dielectric
CG	C0G
X	X5R
B	X7R
BS	X7S
BT	X7T
DS	X6S
DT	X6T

容量误差 Capacitance Tolerance		
代码 Code	误差 Tolerance	备注 Note
A	±0.05pF	A、B、C、D 级误差适用于容量≤10pF 的产品。These Capacitance tolerance A, B, C, D are just applicable the capacitance that equals to or less than 10pF。
B	±0.10pF	
C	±0.25pF	
D	±0.50pF	
F	±1%	
G	±2%	
J	±5%	
K	±10%	
M	±20%	
A	±0.05pF	

端头材料 Terminal Material Styles	
端头类别 Termination Styles	表示方式 Express Method
三层电镀端头 Nickel Barrier Termination	N
柔性端头多层片式陶瓷电容器 MLCC with Flexible Solderable Termination	A

◆产品结构
Product Structure

序号 NO	名称 Name
①	陶瓷介质 Ceramic dielectric
②	内电极 Inner electrode
③	外电极 Substrate electrode
④	镍层 Nickel Layer
⑤	锡层 Tin Layer

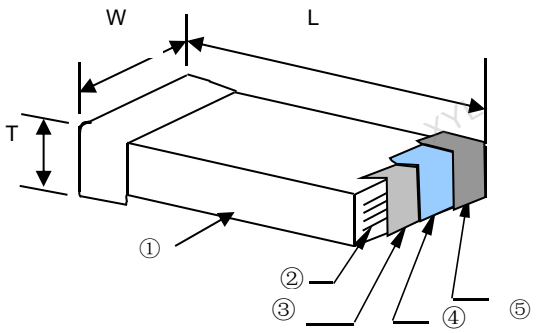

◆ 产品尺寸
Product Dimensions

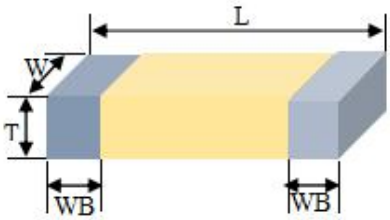

型号 Type		尺寸 Dimensions (mm)				尺寸代码 Size code
尺寸代码 SizeCode	公制表示 Metric	L	W	T	WB	
1005	0402	0.40±0.02	0.20±0.02	0.20±0.02	0.10±0.03	AA
0201	0603	0.60±0.03	0.30±0.03	0.30±0.03	0.15±0.05	BA
		0.60±0.09	0.30±0.09	0.30±0.09	0.15±0.05	BB
		0.60±0.09	0.30±0.09	0.50±0.05	0.15±0.10	BC
0402	1005	1.00±0.05	0.50±0.05	0.50±0.05	0.25±0.05	CA
		1.00±0.15	0.50±0.15	0.50±0.15	0.25±0.05	CB
		1.00±0.20	0.50±0.20	0.50±0.20	0.25±0.05	CC
0603	1608	1.60±0.10	0.80±0.10	0.80±0.10	0.35±0.20	DA
		1.60±0.20	0.80±0.20	0.80±0.20	0.35±0.20	DB
0805	2012	2.00±0.20	1.25±0.20	0.80±0.20	0.50±0.20	EA
				1.25±0.25		EB
1206	3216	3.20±0.30	1.60±0.30	0.80±0.20	0.60±0.30	FA
				1.25±0.25		FB
				1.60±0.30		FC
1210	3225	3.20±0.30	2.50±0.30	1.25±0.25	0.60±0.30	GA
				1.60±0.30		GB
				2.50±0.30		GD
1808	4520	4.50±0.40	2.00±0.20	1.60±0.30	0.60±0.30	HA
				2.00±0.30		HB
1812	4532	4.50±0.40	3.20±0.30	1.60±0.30	0.60±0.30	IB
				2.00±0.30		IC

备注：1、产品具体厚度“T”查阅本承认书中“容量范围及其电压”。2、可根据客户的特殊要求设计符合客户需求的产品。

Note：1、The specific thickness of the product can read "capacity range and Voltage "in this approval sheet。

2、We can design according to customer special requirements。

◆温度系数/特性 Temperature Coefficient /Characteristics

介质种类 Dielectric	参考温度点 Reference Temperature Point	标称温度系数 Temperature Coefficient	工作温度范围 Operation Temperature Range
C0G	25°C	0±30ppm/℃	-55℃～125℃
X7R	25°C	±15%	-55℃～125℃
X7S	25°C	±22%	-55℃～125℃
X7T	25°C	-33%~+22%	-55℃～125℃
X6S	25°C	±22%	-55℃～105℃
X6T	25°C	-33%~+22%	-55℃～105℃
X5R	25°C	±15%	-55℃～85℃

◆ 容量范围及电压
Capacitance Range and Voltage

* 常规电压（Ur≤50V）产品

Conventional Voltage （Ur≤50V） products

材料 Dielectric	C0G									
尺寸 Dimension	1005 (0.4mm*0.2mm)				0201 (0.6mm*0.3mm)		0402 (1.0mm*0.5mm)		0603 (1.6mm*0.8mm)	
容量/电压 Capacity/ Voltage	10V	16V	25V	50V	25V	50V	25V	50V	25V	50V
0.1pF	AA	AA	AA	AA	BA	BA	CA	CA	DA	DA
0.5pF	AA	AA	AA	AA	BA	BA	CA	CA	DA	DA
1pF	AA	AA	AA	AA	BA	BA	CA	CA	DA	DA
1.2pF	AA	AA	AA	AA	BA	BA	CA	CA	DA	DA
1.5pF	AA	AA	AA	AA	BA	BA	CA	CA	DA	DA
1.8pF	AA	AA	AA	AA	BA	BA	CA	CA	DA	DA
2.0pF	AA	AA	AA	AA	BA	BA	CA	CA	DA	DA
2.2pF	AA	AA	AA	AA	BA	BA	CA	CA	DA	DA
2.7pF	AA	AA	AA	AA	BA	BA	CA	CA	DA	DA
3.0pF	AA	AA	AA	AA	BA	BA	CA	CA	DA	DA
3.3pF	AA	AA	AA	AA	BA	BA	CA	CA	DA	DA
3.9pF	AA	AA	AA	AA	BA	BA	CA	CA	DA	DA
4.7pF	AA	AA	AA	AA	BA	BA	CA	CA	DA	DA
5.6pF	AA	AA	AA	AA	BA	BA	CA	CA	DA	DA
6.8pF	AA	AA	AA	AA	BA	BA	CA	CA	DA	DA
8.2pF	AA	AA	AA	AA	BA	BA	CA	CA	DA	DA
10pF	AA	AA	AA	AA	BA	BA	CA	CA	DA	DA
12pF	AA	AA	AA	AA	BA	BA	CA	CA	DA	DA
15pF	AA	AA	AA	AA	BA	BA	CA	CA	DA	DA
18pF	AA	AA	AA	AA	BA	BA	CA	CA	DA	DA
22pF	AA	AA	AA	AA	BA	BA	CA	CA	DA	DA
27pF	AA	AA	AA	AA	BA	BA	CA	CA	DA	DA
33pF	AA	AA	AA	AA	BA	BA	CA	CA	DA	DA
39pF	AA	AA	AA	AA	BA	BA	CA	CA	DA	DA
47pF	AA	AA	AA	AA	BA	BA	CA	CA	DA	DA
56pF	AA	AA	AA	AA	BA	BA	CA	CA	DA	DA
68pF	AA	AA	AA	AA	BA	BA	CA	CA	DA	DA
82pF	AA	AA	AA	AA	BA	BA	CA	CA	DA	DA
100pF	AA	AA	AA	AA	BA	BA	CA	CA	DA	DA
120pF					BA	BA	CA	CA	DA	DA
150pF					BA	BA	CA	CA	DA	DA
180pF					BA	BA	CA	CA	DA	DA
220pF					BA	BA	CA	CA	DA	DA
270pF					BA	BA	CA	CA	DA	DA
330pF					BA	BA	CA	CA	DA	DA
390pF					BA	BA	CA	CA	DA	DA
470pF					BA	BA	CA	CA	DA	DA
560pF					BA	BA	CA	CA	DA	DA
680pF					BA	BA	CA	CA	DA	DA
820pF							CA	CA	DA	DA
1nF							CA	CA	DA	DA
1.5nF									DA	DA
1.8nF									DA	DA
2.2nF									DA	DA
2.7nF									DA	DA
3.3nF									DA	DA
4.7nF									DA	DA
5.6nF									DA	DA
6.8nF									DA	DA
10nF									DA	DA

代码 Code	AA	BA	CA	DA
T	0.20±0.02	0.30±0.03	0.50±0.05	0.80±0.10

材料 Dielectric	C0G							
尺寸 Dimension	0805 (2.0mm*1.25mm)		1206 (3.2mm*1.6mm)		1210 (3.2mm*2.5mm)		1812 (4.5mm*3.2mm)	
容量/电压 Capacity/ Voltage	25V	50V	25V	50V	25V	50V	25V	50V
0.1pF	EA	EA	FA	FA				
0.2pF	EA	EA	FA	FA				
0.5pF	EA	EA	FA	FA				
1pF	EA	EA	FA	FA				
1.2pF	EA	EA	FA	FA				
1.5pF	EA	EA	FA	FA				
1.8pF	EA	EA	FA	FA				
2.2pF	EA	EA	FA	FA				
2.7pF	EA	EA	FA	FA				
3.3pF	EA	EA	FA	FA				
3.9pF	EA	EA	FA	FA				
4.7pF	EA	EA	FA	FA				
5.6pF	EA	EA	FA	FA				
6.8pF	EA	EA	FA	FA				
8.2pF	EA	EA	FA	FA				
10pF	EA	EA	FA	FA	GA	GA	IB	IB
12pF	EA	EA	FA	FA	GA	GA	IB	IB
15pF	EA	EA	FA	FA	GA	GA	IB	IB
18pF	EA	EA	FA	FA	GA	GA	IB	IB
22pF	EA	EA	FA	FA	GA	GA	IB	IB
27pF	EA	EA	FA	FA	GA	GA	IB	IB
33pF	EA	EA	FA	FA	GA	GA	IB	IB
39pF	EA	EA	FA	FA	GA	GA	IB	IB
47pF	EA	EA	FA	FA	GA	GA	IB	IB
56pF	EA	EA	FA	FA	GA	GA	IB	IB
68pF	EA	EA	FA	FA	GA	GA	IB	IB
100pF	EA	EA	FA	FA	GA	GA	IB	IB
120pF	EA	EA	FA	FA	GA	GA	IB	IB
150pF	EA	EA	FA	FA	GA	GA	IB	IB
180pF	EA	EA	FA	FA	GA	GA	IB	IB
220pF	EA	EA	FA	FA	GA	GA	IB	IB
270pF	EA	EA	FA	FA	GA	GA	IB	IB
330pF	EA	EA	FA	FA	GA	GA	IB	IB
390pF	EA	EA	FA	FA	GA	GA	IB	IB
470pF	EA	EA	FA	FA	GA	GA	IB	IB
560pF	EA	EA	FA	FA	GA	GA	IB	IB
680pF	EA	EA	FA	FA	GA	GA	IB	IB
820pF	EA	EA	FA	FA	GA	GA	IB	IB
1nF	EA	EA	FA	FA	GA	GA	IB	IB
1.5nF	EA	EA	FA	FA	GA	GA	IB	IB
1.8nF	EA	EA	FA	FA	GA	GA	IB	IB
2.2nF	EA	EA	FA	FA	GA	GA	IB	IB
2.7nF	EA	EA	FA	FA	GA	GA	IB	IB
3.3nF	EA	EA	FA	FA	GA	GA	IB	IB
4.7nF	EA	EA	FA	FA	GA	GA	IB	IB
6.8nF	EA	EA	FA	FA	GA	GA	IB	IB
8.2nF	EA	EA	FA	FA	GA	GA	IB	IB
10nF	EA	EA	FA/FB	FA/FB	GA	GA	IB	IB
12nF	EB	EB	FA/FC	FA/FC			IB	IB
22nF	EB	EB	FA/FC	FA/FC			IB	IB
33nF			FA/FC	FA/FC			IB	IB
47nF			FC	FC				
68nF			FC	FC				
82nF			FC	FC				
100nF			FC	FC				

代码 Code	EA	EB	FA	FB	FC	GA	IB
T	0.80±0.20	1.25±0.25	0.80±0.20	1.25±0.25	1.60±0.30	1.25±0.25	1.60±0.30

*II 类电容器具体电压对应容量及厚度情况列表

A list of the specific Voltage-specific capacitors of Class Ⅱ capacitors

尺寸 Dimension	1005 (0.4mm*0.2mm)																									
材料 Dielectric	X7R 系列					X7S 系列					X7T 系列					X6S/X6T 系列					X5R 系列				
容量/电压 Capacity/ Voltage	6.3V	10V	16V	25V	50V	6.3V	10V	16V	25V	50V	6.3V	10V	16V	25V	50V	6.3V	10V	16V	25V	50V	6.3V	10V	16V	25V	50V
120pF	AA	AA	AA	AA	AA	AA	AA	AA	AA	AA	AA	AA	AA	AA	AA	AA	AA	AA	AA	AA	AA	AA	AA	AA	AA
150pF	AA	AA	AA	AA	AA	AA	AA	AA	AA	AA	AA	AA	AA	AA	AA	AA	AA	AA	AA	AA	AA	AA	AA	AA	AA
180pF	AA	AA	AA	AA	AA	AA	AA	AA	AA	AA	AA	AA	AA	AA	AA	AA	AA	AA	AA	AA	AA	AA	AA	AA	AA
220pF	AA	AA	AA	AA	AA	AA	AA	AA	AA	AA	AA	AA	AA	AA	AA	AA	AA	AA	AA	AA	AA	AA	AA	AA	AA
270pF	AA	AA	AA	AA	AA	AA	AA	AA	AA	AA	AA	AA	AA	AA	AA	AA	AA	AA	AA	AA	AA	AA	AA	AA	AA
330pF	AA	AA	AA	AA	AA	AA	AA	AA	AA	AA	AA	AA	AA	AA	AA	AA	AA	AA	AA	AA	AA	AA	AA	AA	AA
390pF	AA	AA	AA	AA	AA	AA	AA	AA	AA	AA	AA	AA	AA	AA	AA	AA	AA	AA	AA	AA	AA	AA	AA	AA	AA
470pF	AA	AA	AA	AA	AA	AA	AA	AA	AA	AA	AA	AA	AA	AA	AA	AA	AA	AA	AA	AA	AA	AA	AA	AA	AA
560pF	AA	AA	AA	AA	AA	AA	AA	AA	AA	AA	AA	AA	AA	AA	AA	AA	AA	AA	AA	AA	AA	AA	AA	AA	AA
680pF	AA	AA	AA	AA	AA	AA	AA	AA	AA	AA	AA	AA	AA	AA	AA	AA	AA	AA	AA	AA	AA	AA	AA	AA	AA
820pF	AA	AA	AA	AA	AA	AA	AA	AA	AA	AA	AA	AA	AA	AA	AA	AA	AA	AA	AA	AA	AA	AA	AA	AA	AA
1nF	AA	AA	AA	AA	AA	AA	AA	AA	AA	AA	AA	AA	AA	AA	AA	AA	AA	AA	AA	AA	AA	AA	AA	AA	AA
1.2nF	AA	AA	AA	AA	AA	AA	AA	AA	AA	AA	AA	AA	AA	AA	AA	AA	AA	AA	AA	AA	AA	AA	AA	AA	AA
1.5nF	AA	AA	AA	AA	AA	AA	AA	AA	AA	AA	AA	AA	AA	AA	AA	AA	AA	AA	AA	AA	AA	AA	AA	AA	AA
1.8nF	AA	AA	AA	AA	AA	AA	AA	AA	AA	AA	AA	AA	AA	AA	AA	AA	AA	AA	AA	AA	AA	AA	AA	AA	AA
2.2nF	AA	AA	AA	AA	AA	AA	AA	AA	AA	AA	AA	AA	AA	AA	AA	AA	AA	AA	AA	AA	AA	AA	AA	AA	AA
2.7nF						AA	AA	AA			AA	AA	AA			AA	AA	AA			AA	AA	AA		
3.3nF						AA	AA	AA			AA	AA	AA			AA	AA	AA			AA	AA	AA		
3.9nF						AA	AA	AA			AA	AA	AA			AA	AA	AA			AA	AA	AA		
4.7nF						AA	AA	AA			AA	AA	AA			AA	AA	AA			AA	AA	AA		
5.6nF						AA					AA					AA					AA	AA	AA		
6.8nF						AA					AA					AA					AA	AA	AA		
8.2nF						AA					AA					AA					AA	AA	AA		
10nF						AA					AA					AA					AA	AA	AA		
15nF						AA					AA					AA					AA	AA	AA		
22nF						AA					AA					AA					AA	AA	AA		
33nF						AA					AA					AA					AA	AA	AA		
47nF						AA					AA					AA					AA	AA	AA		
68nF						AA					AA					AA					AA	AA	AA		
100nF						AA					AA					AA					AA	AA	AA		
220nF																					AA				

尺寸 Dimension	0201 (0.6mm*0.3mm)																									
材料 Dielectric	X7R 系列					X7S 系列					X7T 系列					X6S/X6T 系列					X5R 系列				
容量/电压 Capacity/ Voltage	6.3V	10V	16V	25V	50V	6.3V	10V	16V	25V	50V	6.3V	10V	16V	25V	50V	6.3V	10V	16V	25V	50V	6.3V	10V	16V	25V	50V
100pF	BA	BA	BA	BA	BA	BA	BA	BA	BA	BA	BA	BA	BA	BA	BA	BA	BA	BA	BA	BA					
120pF	BA	BA	BA	BA	BA	BA	BA	BA	BA	BA	BA	BA	BA	BA	BA	BA	BA	BA	BA	BA					
180pF	BA	BA	BA	BA	BA	BA	BA	BA	BA	BA	BA	BA	BA	BA	BA	BA	BA	BA	BA	BA					
220pF	BA	BA	BA	BA	BA	BA	BA	BA	BA	BA	BA	BA	BA	BA	BA	BA	BA	BA	BA	BA					
330pF	BA	BA	BA	BA	BA	BA	BA	BA	BA	BA	BA	BA	BA	BA	BA	BA	BA	BA	BA	BA					
470pF	BA	BA	BA	BA	BA	BA	BA	BA	BA	BA	BA	BA	BA	BA	BA	BA	BA	BA	BA	BA					
560pF	BA	BA	BA	BA	BA	BA	BA	BA	BA	BA	BA	BA	BA	BA	BA	BA	BA	BA	BA	BA					
680pF	BA	BA	BA	BA	BA	BA	BA	BA	BA	BA	BA	BA	BA	BA	BA	BA	BA	BA	BA	BA					
1nF	BA	BA	BA	BA	BA	BA	BA	BA	BA	BA	BA	BA	BA	BA	BA	BA	BA	BA	BA	BA					
2.2nF	BA	BA	BA	BA	BA	BA	BA	BA	BA	BA	BA	BA	BA	BA	BA	BA	BA	BA	BA	BA					
3.9nF	BA	BA	BA	BA	BA	BA	BA	BA	BA	BA	BA	BA	BA	BA	BA	BA	BA	BA	BA	BA					
4.7nF	BA	BA	BA	BA	BA	BA	BA	BA	BA	BA	BA	BA	BA	BA	BA	BA	BA	BA	BA	BA					
5.6nF	BA	BA	BA	BA		BA	BA	BA	BA		BA	BA	BA	BA		BA	BA	BA	BA						
6.8nF	BA	BA	BA	BA		BA	BA	BA	BA		BA	BA	BA	BA		BA	BA	BA	BA						
10nF	BA	BA	BA	BA		BA	BA	BA	BA		BA	BA	BA	BA		BA	BA	BA	BA						

代码 Code	AA	BA
T	0.2±0.02	0.3±0.03

尺寸 Dimension	0201 (0.6mm*0.3mm)																								
材料 Dielectric	X7R 系列					X7S 系列					X7T 系列					X6S/X6T 系列					X5R 系列				
容量/电压 Capacity/ Voltage	6.3V	10V	16V	25V	50V	6.3V	10V	16V	25V	50V	6.3V	10V	16V	25V	50V	6.3V	10V	16V	25V	50V	6.3V	10V	16V	25V	50V
15nF	BA	BA	BA			BA	BA	BA	BA		BA	BA	BA	BA		BA	BA	BA	BA		BA	BA	BA	BA	
18nF	BA	BA	BA			BA	BA	BA	BA		BA	BA	BA	BA		BA	BA	BA	BA		BA	BA	BA	BA	
22nF	BA	BA	BA			BA	BA	BA	BA		BA	BA	BA	BA		BA	BA	BA	BA		BA	BA	BA	BA	
33nF						BA	BA	BA	BA		BA	BA	BA	BA		BA	BA	BA	BA		BA	BA	BA	BA	
47nF						BA	BA	BA	BA		BA	BA	BA	BA		BA	BA	BA	BA		BA	BA	BA	BA	
56nF						BB	BB	BB	BB		BB	BB	BB	BB		BB	BB	BB	BB		BB	BB	BB	BB	
68nF						BB	BB	BB	BB		BB	BB	BB	BB		BB	BB	BB	BB		BB	BB	BB	BB	
100nF						BB	BB	BB			BB	BB	BB			BB	BB	BB	BB		BB	BB	BB	BB	
220nF																BB	BB				BB	BB	BB		
330nF																BB					BB	BB	BB		
470nF																BB					BB	BB	BB		
1μF																BB					BB	BB	BB		
2.2μF																					BB	BB			
4.7μF																					BC				

尺寸 Dimension	0402 (1.0mm*0.5mm)																								
材料 Dielectric	X7R 系列					X7S 系列					X7T 系列					X6S/X6T 系列					X5R 系列				
容量/电压 Capacity/ Voltage	6.3V	10V	16V	25V	50V	6.3V	10V	16V	25V	50V	6.3V	10V	16V	25V	50V	6.3V	10V	16V	25V	50V	6.3V	10V	16V	25V	50V
330pF	CA	CA	CA	CA	CA	CA	CA	CA	CA	CA	CA	CA	CA	CA	CA	CA	CA	CA	CA	CA					
470pF	CA	CA	CA	CA	CA	CA	CA	CA	CA	CA	CA	CA	CA	CA	CA	CA	CA	CA	CA	CA					
560pF	CA	CA	CA	CA	CA	CA	CA	CA	CA	CA	CA	CA	CA	CA	CA	CA	CA	CA	CA	CA					
680pF	CA	CA	CA	CA	CA	CA	CA	CA	CA	CA	CA	CA	CA	CA	CA	CA	CA	CA	CA	CA					
1nF	CA	CA	CA	CA	CA	CA	CA	CA	CA	CA	CA	CA	CA	CA	CA	CA	CA	CA	CA	CA					
2.2nF	CA	CA	CA	CA	CA	CA	CA	CA	CA	CA	CA	CA	CA	CA	CA	CA	CA	CA	CA	CA					
3.9nF	CA	CA	CA	CA	CA	CA	CA	CA	CA	CA	CA	CA	CA	CA	CA	CA	CA	CA	CA	CA					
4.7nF	CA	CA	CA	CA	CA	CA	CA	CA	CA	CA	CA	CA	CA	CA	CA	CA	CA	CA	CA	CA					
5.6nF	CA	CA	CA	CA	CA	CA	CA	CA	CA	CA	CA	CA	CA	CA	CA	CA	CA	CA	CA	CA					
6.8nF	CA	CA	CA	CA	CA	CA	CA	CA	CA	CA	CA	CA	CA	CA	CA	CA	CA	CA	CA	CA					
10nF	CA	CA	CA	CA	CA	CA	CA	CA	CA	CA	CA	CA	CA	CA	CA	CA	CA	CA	CA	CA					
15nF	CA	CA	CA	CA	CA	CA	CA	CA	CA	CA	CA	CA	CA	CA	CA	CA	CA	CA	CA	CA					
18nF	CA	CA	CA	CA	CA	CA	CA	CA	CA	CA	CA	CA	CA	CA	CA	CA	CA	CA	CA	CA					
22nF	CA	CA	CA	CA	CA	CA	CA	CA	CA	CA	CA	CA	CA	CA	CA	CA	CA	CA	CA	CA					
33nF	CA	CA	CA	CA	CA	CA	CA	CA	CA	CA	CA	CA	CA	CA	CA	CA	CA	CA	CA	CA					
47nF	CA	CA	CA	CA	CA	CA	CA	CA	CA	CA	CA	CA	CA	CA	CA	CA	CA	CA	CA	CA					CA
56nF	CA	CA	CA	CA	CA	CA	CA	CA	CA	CA	CA	CA	CA	CA	CA	CA	CA	CA	CA	CA					CA
68nF	CA	CA	CA	CA	CA	CA	CA	CA	CA	CA	CA	CA	CA	CA	CA	CA	CA	CA	CA	CA					CA
100nF	CA	CA	CA	CA	CA	CA	CA	CA	CA	CA	CA	CA	CA	CA	CA	CA	CA	CA	CA	CA	CA	CA	CA	CA	CA
220nF	CB	CB	CB	CB		CB	CB	CB	CB		CB	CB	CB	CB		CB	CB	CB	CB		CB	CB	CB	CB	
330nF	CB	CB	CB			CB	CB	CB			CB	CB	CB			CB	CB	CB			CB	CB	CB	CB	
470nF	CB	CB	CB			CB	CB	CB			CB	CB	CB			CB	CB	CB			CB	CB	CB	CB	
680nF	CB	CB				CB	CB				CB	CB				CB	CB	CB			CB	CB	CB	CB	
1μF	CB	CB				CB	CB				CB	CB				CB	CB	CB			CB	CB	CB	CB	
2.2μF						CC					CC					CC	CC	CC			CC	CC	CC	CC	
4.7μF																CC	CC				CC	CC	CC		
6.8μF																CC					CC	CC			
10μF																CC					CC	CC			
22μF																					CC				

代码 Code	BA	BB	BC	CA	CB	CC
T	0.30±0.03	0.30±0.09	0.50±0.05	0.50±0.05	0.50±0.15	0.50±0.20

尺寸 Dimension	0603 (1.6mm*0.8mm)																								
材料 Dielectric	X7R 系列					X7S 系列					X7T 系列					X6S/X6T 系列					X5R 系列				
容量/电压 Capacity/ Voltage	6.3V	10V	16V	25V	50V	6.3V	10V	16V	25V	50V	6.3V	10V	16V	25V	50V	6.3V	10V	16V	25V	50V	6.3V	10V	16V	25V	50V
330pF	DA	DA	DA	DA	DA	DA	DA	DA	DA	DA	DA	DA	DA	DA	DA	DA	DA	DA	DA	DA					
470pF	DA	DA	DA	DA	DA	DA	DA	DA	DA	DA	DA	DA	DA	DA	DA	DA	DA	DA	DA	DA					
560pF	DA	DA	DA	DA	DA	DA	DA	DA	DA	DA	DA	DA	DA	DA	DA	DA	DA	DA	DA	DA					
680pF	DA	DA	DA	DA	DA	DA	DA	DA	DA	DA	DA	DA	DA	DA	DA	DA	DA	DA	DA	DA					
820pF	DA	DA	DA	DA	DA	DA	DA	DA	DA	DA	DA	DA	DA	DA	DA	DA	DA	DA	DA	DA					
1nF	DA	DA	DA	DA	DA	DA	DA	DA	DA	DA	DA	DA	DA	DA	DA	DA	DA	DA	DA	DA					
1.2nF	DA	DA	DA	DA	DA	DA	DA	DA	DA	DA	DA	DA	DA	DA	DA	DA	DA	DA	DA	DA					
1.5nF	DA	DA	DA	DA	DA	DA	DA	DA	DA	DA	DA	DA	DA	DA	DA	DA	DA	DA	DA	DA					
1.8nF	DA	DA	DA	DA	DA	DA	DA	DA	DA	DA	DA	DA	DA	DA	DA	DA	DA	DA	DA	DA					
2.2nF	DA	DA	DA	DA	DA	DA	DA	DA	DA	DA	DA	DA	DA	DA	DA	DA	DA	DA	DA	DA					
2.7nF	DA	DA	DA	DA	DA	DA	DA	DA	DA	DA	DA	DA	DA	DA	DA	DA	DA	DA	DA	DA					
3.9nF	DA	DA	DA	DA	DA	DA	DA	DA	DA	DA	DA	DA	DA	DA	DA	DA	DA	DA	DA	DA					
4.7nF	DA	DA	DA	DA	DA	DA	DA	DA	DA	DA	DA	DA	DA	DA	DA	DA	DA	DA	DA	DA					
5.6nF	DA	DA	DA	DA	DA	DA	DA	DA	DA	DA	DA	DA	DA	DA	DA	DA	DA	DA	DA	DA					
6.8nF	DA	DA	DA	DA	DA	DA	DA	DA	DA	DA	DA	DA	DA	DA	DA	DA	DA	DA	DA	DA					
8.2nF	DA	DA	DA	DA	DA	DA	DA	DA	DA	DA	DA	DA	DA	DA	DA	DA	DA	DA	DA	DA					
10nF	DA	DA	DA	DA	DA	DA	DA	DA	DA	DA	DA	DA	DA	DA	DA	DA	DA	DA	DA	DA					
12nF	DA	DA	DA	DA	DA	DA	DA	DA	DA	DA	DA	DA	DA	DA	DA	DA	DA	DA	DA	DA					
15nF	DA	DA	DA	DA	DA	DA	DA	DA	DA	DA	DA	DA	DA	DA	DA	DA	DA	DA	DA	DA					
18nF	DA	DA	DA	DA	DA	DA	DA	DA	DA	DA	DA	DA	DA	DA	DA	DA	DA	DA	DA	DA					
22nF	DA	DA	DA	DA	DA	DA	DA	DA	DA	DA	DA	DA	DA	DA	DA	DA	DA	DA	DA	DA					
27nF	DA	DA	DA	DA	DA	DA	DA	DA	DA	DA	DA	DA	DA	DA	DA	DA	DA	DA	DA	DA					
33nF	DA	DA	DA	DA	DA	DA	DA	DA	DA	DA	DA	DA	DA	DA	DA	DA	DA	DA	DA	DA					
39nF	DA	DA	DA	DA	DA	DA	DA	DA	DA	DA	DA	DA	DA	DA	DA	DA	DA	DA	DA	DA					
47nF	DA	DA	DA	DA	DA	DA	DA	DA	DA	DA	DA	DA	DA	DA	DA	DA	DA	DA	DA	DA					
56nF	DA	DA	DA	DA	DA	DA	DA	DA	DA	DA	DA	DA	DA	DA	DA	DA	DA	DA	DA	DA					
68nF	DA	DA	DA	DA	DA	DA	DA	DA	DA	DA	DA	DA	DA	DA	DA	DA	DA	DA	DA	DA					
82nF	DA	DA	DA	DA	DA	DA	DA	DA	DA	DA	DA	DA	DA	DA	DA	DA	DA	DA	DA	DA					
100nF	DA	DA	DA	DA	DA	DA	DA	DA	DA	DA	DA	DA	DA	DA	DA	DA	DA	DA	DA	DA					
220nF	DA	DA	DA	DA	DA	DA	DA	DA	DA	DA	DA	DA	DA	DA	DA	DA	DA	DA	DA	DA					
330nF	DA	DA	DA	DA	DA	DA	DA	DA	DA	DA	DA	DA	DA	DA	DA	DA	DA	DA	DA	DA					
470nF	DA	DA	DA	DA	DA	DA	DA	DA	DA	DA	DA	DA	DA	DA	DA	DA	DA	DA	DA	DA	DA	DA	DA	DA	DA
680nF	DA	DA	DA	DA	DA	DA	DA	DA	DA	DA	DA	DA	DA	DA	DA	DA	DA	DA	DA	DA	DA	DA	DA	DA	DA
1μF	DB	DB	DB	DB	DB	DB	DB	DB	DB	DB	DB	DB	DB	DB	DB	DB	DB	DB	DB	DB	DB	DB	DB	DB	DB
2.2 μF	DB	DB	DB	DB		DB	DB	DB	DB		DB	DB	DB	DB		DB	DB	DB	DB		DB	DB	DB	DB	DB
3.3 μF	DB	DB				DB	DB				DB	DB				DB	DB				DB	DB	DB	DB	
4.7 μF	DB	DB				DB	DB				DB	DB				DB	DB				DB	DB	DB	DB	
6.8 μF											DB					DB	DB				DB	DB	DB	DB	
10 μF											DB					DB	DB				DB	DB	DB	DB	
15 μF																DB					DB	DB			
22 μF																DB					DB	DB			
47μF																					DB				

代码 Code	DA	DB
T	0.80±0.10	0.80±0.20

尺寸 Dimension	0805 (2.0mm*1.25mm)																								
材料 Dielectric	X7R 系列					X7S 系列					X7T 系列					X6S/X6T 系列					X5R 系列				
容量/电压 Capacity/ Voltage	6.3V	10V	16V	25V	50V	6.3V	10V	16V	25V	50V	6.3V	10V	16V	25V	50V	6.3V	10V	16V	25V	50V	6.3V	10V	16V	25V	50V
330pF	EA	EA	EA	EA	EA	EA	EA	EA	EA	EA	EA	EA	EA	EA	EA	EA	EA	EA	EA	EA					
470pF	EA	EA	EA	EA	EA	EA	EA	EA	EA	EA	EA	EA	EA	EA	EA	EA	EA	EA	EA	EA					
560pF	EA	EA	EA	EA	EA	EA	EA	EA	EA	EA	EA	EA	EA	EA	EA	EA	EA	EA	EA	EA					
680pF	EA	EA	EA	EA	EA	EA	EA	EA	EA	EA	EA	EA	EA	EA	EA	EA	EA	EA	EA	EA					
820pF	EA	EA	EA	EA	EA	EA	EA	EA	EA	EA	EA	EA	EA	EA	EA	EA	EA	EA	EA	EA					
1nF	EA	EA	EA	EA	EA	EA	EA	EA	EA	EA	EA	EA	EA	EA	EA	EA	EA	EA	EA	EA					
1.2nF	EA	EA	EA	EA	EA	EA	EA	EA	EA	EA	EA	EA	EA	EA	EA	EA	EA	EA	EA	EA					
1.5nF	EA	EA	EA	EA	EA	EA	EA	EA	EA	EA	EA	EA	EA	EA	EA	EA	EA	EA	EA	EA					
1.8nF	EA	EA	EA	EA	EA	EA	EA	EA	EA	EA	EA	EA	EA	EA	EA	EA	EA	EA	EA	EA					
2.2nF	EA	EA	EA	EA	EA	EA	EA	EA	EA	EA	EA	EA	EA	EA	EA	EA	EA	EA	EA	EA					
2.7nF	EA	EA	EA	EA	EA	EA	EA	EA	EA	EA	EA	EA	EA	EA	EA	EA	EA	EA	EA	EA					
3.3nF	EA	EA	EA	EA	EA	EA	EA	EA	EA	EA	EA	EA	EA	EA	EA	EA	EA	EA	EA	EA					
3.9nF	EA	EA	EA	EA	EA	EA	EA	EA	EA	EA	EA	EA	EA	EA	EA	EA	EA	EA	EA	EA					
4.7nF	EA	EA	EA	EA	EA	EA	EA	EA	EA	EA	EA	EA	EA	EA	EA	EA	EA	EA	EA	EA					
5.6nF	EA	EA	EA	EA	EA	EA	EA	EA	EA	EA	EA	EA	EA	EA	EA	EA	EA	EA	EA	EA					
6.8nF	EA	EA	EA	EA	EA	EA	EA	EA	EA	EA	EA	EA	EA	EA	EA	EA	EA	EA	EA	EA					
8.2nF	EA	EA	EA	EA	EA	EA	EA	EA	EA	EA	EA	EA	EA	EA	EA	EA	EA	EA	EA	EA					
10nF	EA	EA	EA	EA	EA	EA	EA	EA	EA	EA	EA	EA	EA	EA	EA	EA	EA	EA	EA	EA					
15nF	EA	EA	EA	EA	EA	EA	EA	EA	EA	EA	EA	EA	EA	EA	EA	EA	EA	EA	EA	EA					
18nF	EA	EA	EA	EA	EA	EA	EA	EA	EA	EA	EA	EA	EA	EA	EA	EA	EA	EA	EA	EA					
22nF	EA	EA	EA	EA	EA	EA	EA	EA	EA	EA	EA	EA	EA	EA	EA	EA	EA	EA	EA	EA					
33nF	EA	EA	EA	EA	EA	EA	EA	EA	EA	EA	EA	EA	EA	EA	EA	EA	EA	EA	EA	EA					
47nF	EA	EA	EA	EA	EA	EA	EA	EA	EA	EA	EA	EA	EA	EA	EA	EA	EA	EA	EA	EA					
56nF	EA	EA	EA	EA	EA	EA	EA	EA	EA	EA	EA	EA	EA	EA	EA	EA	EA	EA	EA	EA					
68nF	EA	EA	EA	EA	EA	EA	EA	EA	EA	EA	EA	EA	EA	EA	EA	EA	EA	EA	EA	EA					
82nF	EA	EA	EA	EA	EA	EA	EA	EA	EA	EA	EA	EA	EA	EA	EA	EA	EA	EA	EA	EA					
100nF	EA	EA	EA	EA	EA	EA	EA	EA	EA	EA	EA	EA	EA	EA	EA	EA	EA	EA	EA	EA					
220nF	EA	EA	EA	EA	EA	EA	EA	EA	EA	EA	EA	EA	EA	EA	EA	EA/EB*	EA/EB*	EA/EB*	EA/EB*	EA/EB*					
330nF	EA	EA	EA	EA	EA	EA	EA	EA	EA	EA	EA	EA	EA	EA	EA	EA	EA	EA	EA	EA					
470nF	EB	EB	EB	EB	EB	EB	EB	EB	EB	EB	EB	EB	EB	EB	EB	EA/EB*	EA/EB*	EA/EB*	EA/EB*	EA/EB*					
680nF	EB	EB	EB	EB	EB	EB	EB	EB	EB	EB	EB	EB	EB	EB	EB	EA/EB*	EA/EB*	EA/EB*	EA/EB*	EA/EB*					
1μF	EB	EB	EB	EB	EB	EB	EB	EB	EB	EB	EB	EB	EB	EB	EB	EB	EB	EB	EB	EB	EB	EB	EB	EB	EB
2.2μF	EB	EB	EB	EB	EB	EB	EB	EB	EB	EB	EB	EB	EB	EB	EB	EB	EB	EB	EB	EB	EB	EB	EB	EB	EB
3.3μF	EB	EB	EB	EB	EB	EB	EB	EB	EB	EB	EB	EB	EB	EB	EB	EB	EB	EB	EB	EB	EB	EB	EB	EB	EB
4.7μF	EB	EB	EB	EB	EB	EB	EB	EB	EB	EB	EB	EB	EB	EB	EB	EB	EB	EB	EB	EB	EB	EB	EB	EB	EB
6.8μF	EB	EB	EB	EB		EB	EB	EB	EB		EB	EB	EB	EB		EB	EB	EB	EB		EB	EB	EB	EB	EB
10μF	EB	EB	EB	EB		EB	EB	EB	EB		EB	EB	EB	EB		EB	EB	EB	EB		EB	EB	EB	EB	EB
15μF																EB	EB	EB			EB	EB	EB	EB	
22μF																EB	EB	EB			EB	EB	EB	EB	
47μF																EB					EB	EB			

代码 Code	EA	EB	备注 Note
T	0.80±0.20	1.25±0.25	加“*”为特殊品 Add "*" as special product.

尺寸 Dimension	1206 (3.2mm*1.6mm)																								
材料 Dielectric	X7R 系列					X7S 系列					X7T 系列					X6S/X6T 系列					X5R 系列				
容量/电压 Capacity/ Voltage	6.3V	10V	16V	25V	50V	6.3V	10V	16V	25V	50V	6.3V	10V	16V	25V	50V	6.3V	10V	16V	25V	50V	6.3V	10V	16V	25V	50V
330pF	FA	FA	FA	FA	FA	FA	FA	FA	FA	FA	FA	FA	FA	FA	FA	FA	FA	FA	FA	FA					
470pF	FA	FA	FA	FA	FA	FA	FA	FA	FA	FA	FA	FA	FA	FA	FA	FA	FA	FA	FA	FA					
560pF	FA	FA	FA	FA	FA	FA	FA	FA	FA	FA	FA	FA	FA	FA	FA	FA	FA	FA	FA	FA					
680pF	FA	FA	FA	FA	FA	FA	FA	FA	FA	FA	FA	FA	FA	FA	FA	FA	FA	FA	FA	FA					
820pF	FA	FA	FA	FA	FA	FA	FA	FA	FA	FA	FA	FA	FA	FA	FA	FA	FA	FA	FA	FA					
1nF	FA	FA	FA	FA	FA	FA	FA	FA	FA	FA	FA	FA	FA	FA	FA	FA	FA	FA	FA	FA					
1.2nF	FA	FA	FA	FA	FA	FA	FA	FA	FA	FA	FA	FA	FA	FA	FA	FA	FA	FA	FA	FA					
1.5nF	FA	FA	FA	FA	FA	FA	FA	FA	FA	FA	FA	FA	FA	FA	FA	FA	FA	FA	FA	FA					
1.8nF	FA	FA	FA	FA	FA	FA	FA	FA	FA	FA	FA	FA	FA	FA	FA	FA	FA	FA	FA	FA					
2.2nF	FA	FA	FA	FA	FA	FA	FA	FA	FA	FA	FA	FA	FA	FA	FA	FA	FA	FA	FA	FA					
2.7nF	FA	FA	FA	FA	FA	FA	FA	FA	FA	FA	FA	FA	FA	FA	FA	FA	FA	FA	FA	FA					
3.3nF	FA	FA	FA	FA	FA	FA	FA	FA	FA	FA	FA	FA	FA	FA	FA	FA	FA	FA	FA	FA					
3.9nF	FA	FA	FA	FA	FA	FA	FA	FA	FA	FA	FA	FA	FA	FA	FA	FA	FA	FA	FA	FA					
4.7nF	FA	FA	FA	FA	FA	FA	FA	FA	FA	FA	FA	FA	FA	FA	FA	FA	FA	FA	FA	FA					
5.6nF	FA	FA	FA	FA	FA	FA	FA	FA	FA	FA	FA	FA	FA	FA	FA	FA	FA	FA	FA	FA					
6.8nF	FA	FA	FA	FA	FA	FA	FA	FA	FA	FA	FA	FA	FA	FA	FA	FA	FA	FA	FA	FA					
8.2nF	FA	FA	FA	FA	FA	FA	FA	FA	FA	FA	FA	FA	FA	FA	FA	FA	FA	FA	FA	FA					
10nF	FA	FA	FA	FA	FA	FA	FA	FA	FA	FA	FA	FA	FA	FA	FA	FA	FA	FA	FA	FA					
12nF	FA	FA	FA	FA	FA	FA	FA	FA	FA	FA	FA	FA	FA	FA	FA	FA	FA	FA	FA	FA					
15nF	FA	FA	FA	FA	FA	FA	FA	FA	FA	FA	FA	FA	FA	FA	FA	FA	FA	FA	FA	FA					
18nF	FA	FA	FA	FA	FA	FA	FA	FA	FA	FA	FA	FA	FA	FA	FA	FA	FA	FA	FA	FA					
22nF	FA	FA	FA	FA	FA	FA	FA	FA	FA	FA	FA	FA	FA	FA	FA	FA	FA	FA	FA	FA					
33nF	FA	FA	FA	FA	FA	FA	FA	FA	FA	FA	FA	FA	FA	FA	FA	FA	FA	FA	FA	FA					
47nF	FA	FA	FA	FA	FA	FA	FA	FA	FA	FA	FA	FA	FA	FA	FA	FA	FA	FA	FA	FA					
56nF	FA	FA	FA	FA	FA	FA	FA	FA	FA	FA	FA	FA	FA	FA	FA	FA	FA	FA	FA	FA					
68nF	FA	FA	FA	FA	FA	FA	FA	FA	FA	FA	FA	FA	FA	FA	FA	FA	FA	FA	FA	FA					
82nF	FA	FA	FA	FA	FA	FA	FA	FA	FA	FA	FA	FA	FA	FA	FA	FA	FA	FA	FA	FA					
100nF	FA	FA	FA	FA	FA	FA	FA	FA	FA	FA	FA	FA	FA	FA	FA	FA	FA	FA	FA	FA					
220nF	FA	FA	FA	FA	FA	FA	FA	FA	FA	FA	FA	FA	FA	FA	FA	FA	FA	FA	FA	FA					
330nF	FA	FA	FA	FA	FA	FA	FA	FA	FA	FA	FA	FA	FA	FA	FA	FA	FA	FA	FA	FA					
470nF	FB	FB	FB	FB	FB	FB	FB	FB	FB	FB	FB	FB	FB	FB	FB	FB	FB	FB	FB	FB					
680nF	FB	FB	FB	FB	FB	FB	FB	FB	FB	FB	FB	FB	FB	FB	FB	FB	FB	FB	FB	FB					
1μF	FA*/FC	FA*/FC	FA*/FC	FA*/FC	FA*/FC	FA*/FC	FA*/FC	FA*/FC	FA*/FC	FA*/FC	FA*/FC	FA*/FC	FA*/FC	FA*/FC	FA*/FC	FA*/FC	FA*/FC	FA*/FC	FA*/FC	FA*/FC	FA*/FC	FA*/FC	FA*/FC	FA*/FC	FA*/FC
2.2μF	FB*/FC	FB*/FC	FB*/FC	FB*/FC	FB*/FC	FB*/FC	FB*/FC	FB*/FC	FB*/FC	FB*/FC	FB*/FC	FB*/FC	FB*/FC	FB*/FC	FB*/FC	FB*/FC	FB*/FC	FB*/FC	FB*/FC	FB*/FC	FB*/FC	FB*/FC	FB*/FC	FB*/FC	FB*/FC
3.3μF	FC	FC	FC	FC	FC	FC	FC	FC	FC	FC	FC	FC	FC	FC	FC	FC	FC	FC	FC	FC	FC	FC	FC	FC	FC
4.7μF	FC	FC	FC	FC	FC	FC	FC	FC	FC	FC	FC	FC	FC	FC	FC	FC	FC	FC	FC	FC	FC	FC	FC	FC	FC
6.8μF	FC	FC	FC	FC	FC	FC	FC	FC	FC	FC	FC	FC	FC	FC	FC	FC	FC	FC	FC	FC	FC	FC	FC	FC	FC
10μF	FC	FC	FC	FC	FC	FC	FC	FC	FC	FC	FC	FC	FC	FC	FC	FC	FC	FC	FC	FC	FC	FC	FC	FC	FC
15μF	FC	FC				FC	FC				FC	FC				FC	FC	FC	FC		FC	FC	FC	FC	
22μF	FC	FC				FC	FC				FC	FC				FC	FC	FC	FC		FC	FC	FC	FC	
47μF											FC					FC					FC	FC	FC		
100μF											FC					FC					FC				

代码 Code	FA	FB	FC	备注 Note
T	0.80±0.20	1.25±0.25	1.60±0.30	加“*”为特殊品 Add "*" as special product.

尺寸 Dimension	1210 (3.2mm*2.5mm)																								
材料 Dielectric	X7R 系列					X7S 系列					X7T 系列					X6S/X6T 系列					X5R 系列				
容量/电压 Capacity/ Voltage	6.3V	10V	16V	25V	50V	6.3V	10V	16V	25V	50V	6.3V	10V	16V	25V	50V	6.3V	10V	16V	25V	50V	6.3V	10V	16V	25V	50V
330pF	GA	GA	GA	GA	GA	GA	GA	GA	GA	GA	GA	GA	GA	GA	GA	GA	GA	GA	GA	GA					
470pF	GA	GA	GA	GA	GA	GA	GA	GA	GA	GA	GA	GA	GA	GA	GA	GA	GA	GA	GA	GA					
560pF	GA	GA	GA	GA	GA	GA	GA	GA	GA	GA	GA	GA	GA	GA	GA	GA	GA	GA	GA	GA					
680pF	GA	GA	GA	GA	GA	GA	GA	GA	GA	GA	GA	GA	GA	GA	GA	GA	GA	GA	GA	GA					
820pF	GA	GA	GA	GA	GA	GA	GA	GA	GA	GA	GA	GA	GA	GA	GA	GA	GA	GA	GA	GA					
1nF	GA	GA	GA	GA	GA	GA	GA	GA	GA	GA	GA	GA	GA	GA	GA	GA	GA	GA	GA	GA					
1.2nF	GA	GA	GA	GA	GA	GA	GA	GA	GA	GA	GA	GA	GA	GA	GA	GA	GA	GA	GA	GA					
1.5nF	GA	GA	GA	GA	GA	GA	GA	GA	GA	GA	GA	GA	GA	GA	GA	GA	GA	GA	GA	GA					
1.8nF	GA	GA	GA	GA	GA	GA	GA	GA	GA	GA	GA	GA	GA	GA	GA	GA	GA	GA	GA	GA					
2.2nF	GA	GA	GA	GA	GA	GA	GA	GA	GA	GA	GA	GA	GA	GA	GA	GA	GA	GA	GA	GA					
2.7nF	GA	GA	GA	GA	GA	GA	GA	GA	GA	GA	GA	GA	GA	GA	GA	GA	GA	GA	GA	GA					
3.3nF	GA	GA	GA	GA	GA	GA	GA	GA	GA	GA	GA	GA	GA	GA	GA	GA	GA	GA	GA	GA					
3.9nF	GA	GA	GA	GA	GA	GA	GA	GA	GA	GA	GA	GA	GA	GA	GA	GA	GA	GA	GA	GA					
4.7nF	GA	GA	GA	GA	GA	GA	GA	GA	GA	GA	GA	GA	GA	GA	GA	GA	GA	GA	GA	GA					
5.6nF	GA	GA	GA	GA	GA	GA	GA	GA	GA	GA	GA	GA	GA	GA	GA	GA	GA	GA	GA	GA					
6.8nF	GA	GA	GA	GA	GA	GA	GA	GA	GA	GA	GA	GA	GA	GA	GA	GA	GA	GA	GA	GA					
8.2nF	GA	GA	GA	GA	GA	GA	GA	GA	GA	GA	GA	GA	GA	GA	GA	GA	GA	GA	GA	GA					
10nF	GA	GA	GA	GA	GA	GA	GA	GA	GA	GA	GA	GA	GA	GA	GA	GA	GA	GA	GA	GA					
12nF	GA	GA	GA	GA	GA	GA	GA	GA	GA	GA	GA	GA	GA	GA	GA	GA	GA	GA	GA	GA					
15nF	GA	GA	GA	GA	GA	GA	GA	GA	GA	GA	GA	GA	GA	GA	GA	GA	GA	GA	GA	GA					
18nF	GA	GA	GA	GA	GA	GA	GA	GA	GA	GA	GA	GA	GA	GA	GA	GA	GA	GA	GA	GA					
22nF	GA	GA	GA	GA	GA	GA	GA	GA	GA	GA	GA	GA	GA	GA	GA	GA	GA	GA	GA	GA					
33nF	GA	GA	GA	GA	GA	GA	GA	GA	GA	GA	GA	GA	GA	GA	GA	GA	GA	GA	GA	GA					
47nF	GA	GA	GA	GA	GA	GA	GA	GA	GA	GA	GA	GA	GA	GA	GA	GA	GA	GA	GA	GA					
56nF	GA	GA	GA	GA	GA	GA	GA	GA	GA	GA	GA	GA	GA	GA	GA	GA	GA	GA	GA	GA					
68nF	GA	GA	GA	GA	GA	GA	GA	GA	GA	GA	GA	GA	GA	GA	GA	GA	GA	GA	GA	GA					
82nF	GA	GA	GA	GA	GA	GA	GA	GA	GA	GA	GA	GA	GA	GA	GA	GA	GA	GA	GA	GA					
100nF	GA	GA	GA	GA	GA	GA	GA	GA	GA	GA	GA	GA	GA	GA	GA	GA	GA	GA	GA	GA					
220nF	GA	GA	GA	GA	GA	GA	GA	GA	GA	GA	GA	GA	GA	GA	GA	GA	GA	GA	GA	GA					
330nF	GB	GB	GB	GB	GB	GB	GB	GB	GB	GB	GB	GB	GB	GB	GB	GB	GB	GB	GB	GB					
470nF	GB	GB	GB	GB	GB	GB	GB	GB	GB	GB	GB	GB	GB	GB	GB	GB	GB	GB	GB	GB					
680nF	GB	GB	GB	GB	GB	GB	GB	GB	GB	GB	GB	GB	GB	GB	GB	GB	GB	GB	GB	GB					
820nF	GB	GB	GB	GB	GB	GB	GB	GB	GB	GB	GB	GB	GB	GB	GB	GB	GB	GB	GB	GB					
1μF	GB	GB	GB	GB	GB	GB	GB	GB	GB	GB	GB	GB	GB	GB	GB	GB	GB	GB	GB	GB					
2.2μF	GB	GB	GB	GB	GB	GB	GB	GB	GB	GB	GB	GB	GB	GB	GB	GB	GB	GB	GB	GB					
3.3μF	GB	GB	GB	GB	GB	GB	GB	GB	GB	GB	GB	GB	GB	GB	GB	GB	GB	GB	GB	GB					
4.7μF	GB	GB	GB	GB	GB	GB	GB	GB	GB	GB	GB	GB	GB	GB	GB	GB	GB	GB	GB	GB	GB	GB	GB	GB	GB
6.8μF	GD	GD	GD	GD	GD	GD	GD	GD	GD	GD	GD	GD	GD	GD	GD	GD	GD	GD	GD	GD	GD	GD	GD	GD	GD
10μF	GD*/GB	GD*/GB	GD*/GB	GD*/GB	GD*/GB	GD*/GB	GD*/GB	GD*/GB	GD*/GB	GD*/GB	GD*/GB	GD*/GB	GD*/GB	GD*/GB	GD*/GB	GD*/GB	GD*/GB	GD*/GB	GD*/GB	GD*/GB	GD*/GB	GD*/GB	GD*/GB	GD*/GB	GD*/GB
15μF	GD	GD	GD	GD		GD	GD	GD	GD		GD	GD	GD	GD		GD	GD	GD	GD		GD	GD	GD	GD	GD
22μF	GD	GD	GD	GD		GD	GD	GD	GD		GD	GD	GD	GD		GD	GD	GD	GD		GD	GD	GD	GD	
47μF	GD	GD				GD	GD				GD	GD				GD	GD				GD	GD	GD		
100μF																					GD	GD			

代码 Code	GA	GB	GD	备注 Note
T	1.25±0.25	1.60±0.30	2.50±0.30	加“*”为特殊品 Add "*" as special product.

尺寸 Dimension	1808 (4.5mm*2.0mm)																								
材料 Dielectric	X7R 系列					X7S 系列					X7T 系列					X6S/X6T 系列					X5R 系列				
容量/电压 Capacity/ Voltage	6.3V	10V	16V	25V	50V	6.3V	10V	16V	25V	50V	6.3V	10V	16V	25V	50V	6.3V	10V	16V	25V	50V	6.3V	10V	16V	25V	50V
330pF	HA	HA	HA	HA	HA	HA	HA	HA	HA	HA	HA	HA	HA	HA	HA	HA	HA	HA	HA	HA	HA	HA	HA	HA	HA
470pF	HA	HA	HA	HA	HA	HA	HA	HA	HA	HA	HA	HA	HA	HA	HA	HA	HA	HA	HA	HA	HA	HA	HA	HA	HA
560pF	HA	HA	HA	HA	HA	HA	HA	HA	HA	HA	HA	HA	HA	HA	HA	HA	HA	HA	HA	HA	HA	HA	HA	HA	HA
680pF	HA	HA	HA	HA	HA	HA	HA	HA	HA	HA	HA	HA	HA	HA	HA	HA	HA	HA	HA	HA	HA	HA	HA	HA	HA
820pF	HA	HA	HA	HA	HA	HA	HA	HA	HA	HA	HA	HA	HA	HA	HA	HA	HA	HA	HA	HA	HA	HA	HA	HA	HA
1nF	HA	HA	HA	HA	HA	HA	HA	HA	HA	HA	HA	HA	HA	HA	HA	HA	HA	HA	HA	HA	HA	HA	HA	HA	HA
1.2nF	HA	HA	HA	HA	HA	HA	HA	HA	HA	HA	HA	HA	HA	HA	HA	HA	HA	HA	HA	HA	HA	HA	HA	HA	HA
1.5nF	HA	HA	HA	HA	HA	HA	HA	HA	HA	HA	HA	HA	HA	HA	HA	HA	HA	HA	HA	HA	HA	HA	HA	HA	HA
1.8nF	HA	HA	HA	HA	HA	HA	HA	HA	HA	HA	HA	HA	HA	HA	HA	HA	HA	HA	HA	HA	HA	HA	HA	HA	HA
2.2nF	HA	HA	HA	HA	HA	HA	HA	HA	HA	HA	HA	HA	HA	HA	HA	HA	HA	HA	HA	HA	HA	HA	HA	HA	HA
2.7nF	HA	HA	HA	HA	HA	HA	HA	HA	HA	HA	HA	HA	HA	HA	HA	HA	HA	HA	HA	HA	HA	HA	HA	HA	HA
3.9nF	HA	HA	HA	HA	HA	HA	HA	HA	HA	HA	HA	HA	HA	HA	HA	HA	HA	HA	HA	HA	HA	HA	HA	HA	HA
4.7nF	HA	HA	HA	HA	HA	HA	HA	HA	HA	HA	HA	HA	HA	HA	HA	HA	HA	HA	HA	HA	HA	HA	HA	HA	HA
5.6nF	HA	HA	HA	HA	HA	HA	HA	HA	HA	HA	HA	HA	HA	HA	HA	HA	HA	HA	HA	HA	HA	HA	HA	HA	HA
6.8nF	HA	HA	HA	HA	HA	HA	HA	HA	HA	HA	HA	HA	HA	HA	HA	HA	HA	HA	HA	HA	HA	HA	HA	HA	HA
8.2nF	HA	HA	HA	HA	HA	HA	HA	HA	HA	HA	HA	HA	HA	HA	HA	HA	HA	HA	HA	HA	HA	HA	HA	HA	HA
10nF	HA	HA	HA	HA	HA	HA	HA	HA	HA	HA	HA	HA	HA	HA	HA	HA	HA	HA	HA	HA	HA	HA	HA	HA	HA
12nF	HA	HA	HA	HA	HA	HA	HA	HA	HA	HA	HA	HA	HA	HA	HA	HA	HA	HA	HA	HA	HA	HA	HA	HA	HA
15nF	HA	HA	HA	HA	HA	HA	HA	HA	HA	HA	HA	HA	HA	HA	HA	HA	HA	HA	HA	HA	HA	HA	HA	HA	HA
18nF	HA	HA	HA	HA	HA	HA	HA	HA	HA	HA	HA	HA	HA	HA	HA	HA	HA	HA	HA	HA	HA	HA	HA	HA	HA
22nF	HA	HA	HA	HA	HA	HA	HA	HA	HA	HA	HA	HA	HA	HA	HA	HA	HA	HA	HA	HA	HA	HA	HA	HA	HA
33nF	HA	HA	HA	HA	HA	HA	HA	HA	HA	HA	HA	HA	HA	HA	HA	HA	HA	HA	HA	HA	HA	HA	HA	HA	HA
47nF	HA	HA	HA	HA	HA	HA	HA	HA	HA	HA	HA	HA	HA	HA	HA	HA	HA	HA	HA	HA	HA	HA	HA	HA	HA
56nF	HA	HA	HA	HA	HA	HA	HA	HA	HA	HA	HA	HA	HA	HA	HA	HA	HA	HA	HA	HA	HA	HA	HA	HA	HA
68nF	HA	HA	HA	HA	HA	HA	HA	HA	HA	HA	HA	HA	HA	HA	HA	HA	HA	HA	HA	HA	HA	HA	HA	HA	HA
82nF	HA	HA	HA	HA	HA	HA	HA	HA	HA	HA	HA	HA	HA	HA	HA	HA	HA	HA	HA	HA	HA	HA	HA	HA	HA
100nF	HA	HA	HA	HA	HA	HA	HA	HA	HA	HA	HA	HA	HA	HA	HA	HA	HA	HA	HA	HA	HA	HA	HA	HA	HA
120nF	HA	HA	HA	HA	HA	HA	HA	HA	HA	HA	HA	HA	HA	HA	HA	HA	HA	HA	HA	HA	HA	HA	HA	HA	HA
150nF	HA	HA	HA	HA	HA	HA	HA	HA	HA	HA	HA	HA	HA	HA	HA	HA	HA	HA	HA	HA	HA	HA	HA	HA	HA
180nF	HA	HA	HA	HA	HA	HA	HA	HA	HA	HA	HA	HA	HA	HA	HA	HA	HA	HA	HA	HA	HA	HA	HA	HA	HA
220nF	HA	HA	HA	HA	HA	HA	HA	HA	HA	HA	HA	HA	HA	HA	HA	HA	HA	HA	HA	HA	HA	HA	HA	HA	HA
330nF	HA	HA	HA	HA	HA	HA	HA	HA	HA	HA	HA	HA	HA	HA	HA	HA	HA	HA	HA	HA	HA	HA	HA	HA	HA
470nF	HA	HA	HA	HA	HA	HA	HA	HA	HA	HA	HA	HA	HA	HA	HA	HA	HA	HA	HA	HA	HA	HA	HA	HA	HA
680nF	HA	HA	HA	HA	HA	HA	HA	HA	HA	HA	HA	HA	HA	HA	HA	HA	HA	HA	HA	HA	HA	HA	HA	HA	HA
1μF	HA	HA	HA	HA	HA	HA	HA	HA	HA	HA	HA	HA	HA	HA	HA	HA	HA	HA	HA	HA	HA	HA	HA	HA	HA
2.2μF	HB	HB	HB	HB	HB	HB	HB	HB	HB	HB	HB	HB	HB	HB	HB	HB	HB	HB	HB	HB	HB	HB	HB	HB	HB
3.3μF	HB	HB	HB	HB	HB	HB	HB	HB	HB	HB	HB	HB	HB	HB	HB	HB	HB	HB	HB	HB	HB	HB	HB	HB	HB
4.7μF	HB	HB	HB	HB	HB	HB	HB	HB	HB	HB	HB	HB	HB	HB	HB	HB	HB	HB	HB	HB	HB	HB	HB	HB	HB
6.8μF																					HB	HB	HB	HB	

代码 Code	HA	HB
T	1.60±0.30	2.00±0.30

尺寸 Dimension	1812 (4.5mm*3.2mm)																								
材料 Dielectric	X7R 系列					X7S 系列					X7T 系列					X6S/X6T 系列					X5R 系列				
容量/电压 Capacity/ Voltage	6.3V	10V	16V	25V	50V	6.3V	10V	16V	25V	50V	6.3V	10V	16V	25V	50V	6.3V	10V	16V	25V	50V	6.3V	10V	16V	25V	50V
330pF	IB	IB	IB	IB	IB	IB	IB	IB	IB	IB	IB	IB	IB	IB	IB	IB	IB	IB	IB	IB	IB	IB	IB	IB	IB
470pF	IB	IB	IB	IB	IB	IB	IB	IB	IB	IB	IB	IB	IB	IB	IB	IB	IB	IB	IB	IB	IB	IB	IB	IB	IB
560pF	IB	IB	IB	IB	IB	IB	IB	IB	IB	IB	IB	IB	IB	IB	IB	IB	IB	IB	IB	IB	IB	IB	IB	IB	IB
680pF	IB	IB	IB	IB	IB	IB	IB	IB	IB	IB	IB	IB	IB	IB	IB	IB	IB	IB	IB	IB	IB	IB	IB	IB	IB
820pF	IB	IB	IB	IB	IB	IB	IB	IB	IB	IB	IB	IB	IB	IB	IB	IB	IB	IB	IB	IB	IB	IB	IB	IB	IB
1nF	IB	IB	IB	IB	IB	IB	IB	IB	IB	IB	IB	IB	IB	IB	IB	IB	IB	IB	IB	IB	IB	IB	IB	IB	IB
1.2nF	IB	IB	IB	IB	IB	IB	IB	IB	IB	IB	IB	IB	IB	IB	IB	IB	IB	IB	IB	IB	IB	IB	IB	IB	IB
1.5nF	IB	IB	IB	IB	IB	IB	IB	IB	IB	IB	IB	IB	IB	IB	IB	IB	IB	IB	IB	IB	IB	IB	IB	IB	IB
1.8nF	IB	IB	IB	IB	IB	IB	IB	IB	IB	IB	IB	IB	IB	IB	IB	IB	IB	IB	IB	IB	IB	IB	IB	IB	IB
2.2nF	IB	IB	IB	IB	IB	IB	IB	IB	IB	IB	IB	IB	IB	IB	IB	IB	IB	IB	IB	IB	IB	IB	IB	IB	IB
3.9nF	IB	IB	IB	IB	IB	IB	IB	IB	IB	IB	IB	IB	IB	IB	IB	IB	IB	IB	IB	IB	IB	IB	IB	IB	IB
4.7nF	IB	IB	IB	IB	IB	IB	IB	IB	IB	IB	IB	IB	IB	IB	IB	IB	IB	IB	IB	IB	IB	IB	IB	IB	IB
5.6nF	IB	IB	IB	IB	IB	IB	IB	IB	IB	IB	IB	IB	IB	IB	IB	IB	IB	IB	IB	IB	IB	IB	IB	IB	IB
6.8nF	IB	IB	IB	IB	IB	IB	IB	IB	IB	IB	IB	IB	IB	IB	IB	IB	IB	IB	IB	IB	IB	IB	IB	IB	IB
8.2nF	IB	IB	IB	IB	IB	IB	IB	IB	IB	IB	IB	IB	IB	IB	IB	IB	IB	IB	IB	IB	IB	IB	IB	IB	IB
10nF	IB	IB	IB	IB	IB	IB	IB	IB	IB	IB	IB	IB	IB	IB	IB	IB	IB	IB	IB	IB	IB	IB	IB	IB	IB
12nF	IB	IB	IB	IB	IB	IB	IB	IB	IB	IB	IB	IB	IB	IB	IB	IB	IB	IB	IB	IB	IB	IB	IB	IB	IB
15nF	IB	IB	IB	IB	IB	IB	IB	IB	IB	IB	IB	IB	IB	IB	IB	IB	IB	IB	IB	IB	IB	IB	IB	IB	IB
18nF	IB	IB	IB	IB	IB	IB	IB	IB	IB	IB	IB	IB	IB	IB	IB	IB	IB	IB	IB	IB	IB	IB	IB	IB	IB
22nF	IB	IB	IB	IB	IB	IB	IB	IB	IB	IB	IB	IB	IB	IB	IB	IB	IB	IB	IB	IB	IB	IB	IB	IB	IB
27nF	IB	IB	IB	IB	IB	IB	IB	IB	IB	IB	IB	IB	IB	IB	IB	IB	IB	IB	IB	IB	IB	IB	IB	IB	IB
33nF	IB	IB	IB	IB	IB	IB	IB	IB	IB	IB	IB	IB	IB	IB	IB	IB	IB	IB	IB	IB	IB	IB	IB	IB	IB
47nF	IB	IB	IB	IB	IB	IB	IB	IB	IB	IB	IB	IB	IB	IB	IB	IB	IB	IB	IB	IB	IB	IB	IB	IB	IB
56nF	IB	IB	IB	IB	IB	IB	IB	IB	IB	IB	IB	IB	IB	IB	IB	IB	IB	IB	IB	IB	IB	IB	IB	IB	IB
68nF	IB	IB	IB	IB	IB	IB	IB	IB	IB	IB	IB	IB	IB	IB	IB	IB	IB	IB	IB	IB	IB	IB	IB	IB	IB
82nF	IB	IB	IB	IB	IB	IB	IB	IB	IB	IB	IB	IB	IB	IB	IB	IB	IB	IB	IB	IB	IB	IB	IB	IB	IB
100nF	IB	IB	IB	IB	IB	IB	IB	IB	IB	IB	IB	IB	IB	IB	IB	IB	IB	IB	IB	IB	IB	IB	IB	IB	IB
220nF	IB	IB	IB	IB	IB	IB	IB	IB	IB	IB	IB	IB	IB	IB	IB	IB	IB	IB	IB	IB	IB	IB	IB	IB	IB
330nF	IB	IB	IB	IB	IB	IB	IB	IB	IB	IB	IB	IB	IB	IB	IB	IB	IB	IB	IB	IB	IB	IB	IB	IB	IB
470nF	IB	IB	IB	IB	IB	IB	IB	IB	IB	IB	IB	IB	IB	IB	IB	IB	IB	IB	IB	IB	IB	IB	IB	IB	IB
680nF	IB	IB	IB	IB	IB	IB	IB	IB	IB	IB	IB	IB	IB	IB	IB	IB	IB	IB	IB	IB	IB	IB	IB	IB	IB
820nF	IB	IB	IB	IB	IB	IB	IB	IB	IB	IB	IB	IB	IB	IB	IB	IB	IB	IB	IB	IB	IB	IB	IB	IB	IB
1μF	IB	IB	IB	IB	IB	IB	IB	IB	IB	IB	IB	IB	IB	IB	IB	IB	IB	IB	IB	IB	IB	IB	IB	IB	IB
2.2μF	IC	IC	IC	IC	IC	IC	IC	IC	IC	IC	IC	IC	IC	IC	IC	IC	IC	IC	IC	IC	IC	IC	IC	IC	IC
3.3μF	IC	IC	IC	IC	IC	IC	IC	IC	IC	IC	IC	IC	IC	IC	IC	IC	IC	IC	IC	IC	IC	IC	IC	IC	IC
4.7μF	IC	IC	IC	IC	IC	IC	IC	IC	IC	IC	IC	IC	IC	IC	IC	IC	IC	IC	IC	IC	IC	IC	IC	IC	IC
6.8μF	IC	IC	IC	IC	IC	IC	IC	IC	IC	IC	IC	IC	IC	IC	IC	IC	IC	IC	IC	IC	IC	IC	IC	IC	IC
10μF																					IB*/IC	IB*/IC	IB*/IC	IB*/IC	IB*/IC

代码 Code	IB	IC
T	1.60±0.30	2.00±0.30

◆可靠性测试方法
Reliability Test Methods

二类介质规格测容量前需去老化处理：测试温度：25℃±3℃，测试湿度：<70%RH. 电容器在 150℃热处理 1 小时，放置 24h 后进行测量。

The second type of medium specification needs to be aged before measuring the capacity: test temperature: 25℃±3℃, test humidity: < 70%RH. The capacitors were heat treated at 150℃ for 1 hour and measured after 24 hours of placement.

<table>
<tr><th>项目
Item</th><th colspan="2">技术规格
Technical Specification</th><th colspan="3">测试方法
Test Method and Remarks</th></tr>
<tr><td rowspan="4">容量
Capacitance</td><td rowspan="3">Ⅰ类
Class Ⅰ</td><td rowspan="3">应符合指定的误差级别
Should be within the specified tolerance.</td><td>标称容量
Capacitance</td><td>测试频率
Measuring Frequency</td><td>测试电压
Measuring Voltage</td></tr>
<tr><td>≤1000pF</td><td>1MHz±10%</td><td rowspan="2">1.0±0.2Vrms</td></tr>
<tr><td>＞1000 pF</td><td>1KHz±10%</td></tr>
<tr><td>Ⅱ类
Class Ⅱ</td><td>应符合指定的误差级别
Should be within the specified tolerance.</td><td colspan="3">测试温度： 25℃±3℃
Test Temperature: 25℃±3℃
C≤10μF：测试频率：1KHz±10% 测试电压：1.0±0.2Vrms
Test Frequency: 1KHz±10% Test Voltage: 1.0±0.2Vrms
C＞10μF 测试频率：120±24 Hz 测试电压：0.5±0.1Vrms
Test Frequency: 120±24 Hz Test Voltage: 0.5±0.1Vrms</td></tr>
<tr><td rowspan="3">绝缘电阻
（IR）
Insulation Resistance</td><td>Ⅰ类
Class Ⅰ</td><td>C≤10 nF, Ri≥50000MΩ
C＞10 nF, Ri•C_R≥500S</td><td colspan="3" rowspan="3">测试电压：额定电压（最高 500V）
测试时间：60±5 秒
测试湿度：≤75%
测试温度： 25℃±3℃
测试充放电电流：≤50mA
Measuring Voltage: Rated Voltage（Max 500V）
Duration: 60±5s
Test Humidity: ≤75%
Test Temperature: 25℃±3℃
Test Current: ≤50mA</td></tr>
<tr><td>Ⅱ类
Class Ⅱ</td><td>C≤25 nF, Ri≥10000MΩ
C＞25 nF, Ri•C_R＞100S</td></tr>
<tr><td colspan="2">注：S=Ω·F</td></tr>
<tr><td rowspan="3">损耗角正切
(DF, tanδ)
Dissipation Factor</td><td rowspan="3">Ⅰ类
Class Ⅰ</td><td>DF</td><td>标称容量
Capacitance</td><td>测试频率
Measuring Frequency</td><td>测试电压
Measuring Voltage</td></tr>
<tr><td>≤1/（400+20C）</td><td>C＜30pF</td><td rowspan="2">1MHz±10%
（C＞1000 pF，1KHz±10%）</td><td rowspan="2">1.0±0.2Vrms</td></tr>
<tr><td>≤0.1%</td><td>C≥30pF</td></tr>
<tr><td>损耗角正切
(DF, tanδ)
Dissipation Factor</td><td>Ⅱ类
Class Ⅱ</td><td colspan="4">
<table>
<tr><th>电压
Voltage</th><th>DF(×10^{-4})</th><th>1005</th><th>0201</th><th>0402</th><th>0603</th><th>0805</th><th>1206 及以上 and above</th></tr>
<tr><td rowspan="5">50V</td><td>≤250</td><td>——</td><td>——</td><td>≤10nF</td><td>＜100nF</td><td>——</td><td>≤680nF</td></tr>
<tr><td>≤350</td><td>——</td><td>≤3.3nF</td><td>≤47nF</td><td>＜470nF</td><td>≤1uF</td><td>≤2.2uF</td></tr>
<tr><td>≤500</td><td>——</td><td>≤10nF</td><td>≤0.1μF</td><td>——</td><td>——</td><td>——</td></tr>
<tr><td>≤750</td><td>——</td><td>——</td><td>——</td><td>——</td><td>≤2.2uF</td><td>≤4.7uF</td></tr>
<tr><td>≤1000</td><td>——</td><td>——</td><td>——</td><td>≤2.2μF</td><td>≤10μF</td><td>≤10μF</td></tr>
<tr><td rowspan="5">25V</td><td>≤250</td><td>——</td><td>——</td><td>≤10nF</td><td>＜100nF</td><td>——</td><td>≤680nF</td></tr>
<tr><td>≤350</td><td>≤1nF</td><td>≤3.3nF</td><td>≤47nF</td><td>＜470nF</td><td>≤1uF</td><td>——</td></tr>
<tr><td>≤500</td><td>——</td><td>≤10nF</td><td>≤220nF</td><td>——</td><td>——</td><td>——</td></tr>
<tr><td>≤750</td><td>≤10nF</td><td>＞10nF</td><td>——</td><td>——</td><td>≤2.2μF</td><td>≤10μF</td></tr>
<tr><td>≤1000</td><td>——</td><td>≤100nF</td><td>≤2.2μF</td><td>≤10μF</td><td>≤22μF</td><td>≤22μF</td></tr>
</table>
</td><td></td></tr>
</table>

项目 Item	技术规格 Technical Specification	测试方法 Test Method and Remarks

损耗角正切 (DF, tanδ) Dissipation Factor

II类 Class II

电压 Voltage	DF(×10⁻⁴)	1005	0201	0402	0603	0805	1206 及以上 and above
16V	≤250	——	——	≤10nF	＜100nF	——	≤680nF
	≤350	≤1nF	≤3.3nF	≤47nF	＜470nF	≤1uF	——
	≤500	——	≤15nF	≤220nF	——	——	——
	≤750	≤10nF	≤47nF	——	——	≤4.7μF	≤10μF
	≤1000	≤100nF	≤100nF	≤4.7μF	≤10μF	≤22μF	≤47μF
10V	≤250	——	——	≤10nF	＜100nF	——	≤680nF
	≤350	≤1nF	≤3.3nF	≤47nF	＜470nF	≤1uF	——
	≤500	——	≤15nF	≤220nF	——	——	——
	≤750	≤10nF	≤47nF	——	——	≤2.2μF	≤10μF
	≤1000	≤100nF	≤1μF	≤10μF	≤22μF	≤47μF	≤100uF
	≤1500	——	≤2.2μF	——	——	——	——
≤6.3V	≤250	——	——	≤10nF	＜100nF	——	≤680nF
	≤350	≤1nF	≤3.3nF	≤47nF	＜470nF	≤1uF	——
	≤500	——	≤15nF	≤220nF	——	——	——
	≤750	≤10nF	≤47nF	——	——	≤2.2uF	≤10μF
	≤1000	≤100nF	≤1μF	≤10μF	≤47μF	≤47μF	≤100uF
	≤1500	≤200nF	≤4.7μF	≤22μF	/	/	/

测试方法 Test Method and Remarks:

C≤10μF
测试频率: 1KHz±10%
测试电压: 1.0±0.2Vrms
Test Frequency: 1KHz±10%
Test Voltage: 1.0±0.2Vrms

C＞10μF
X7R、X5R、X7T、X6S
测试频率: 120±24 Hz
测试电压: 0.5±0.1Vrms
Test Frequency: 120±24Hz
Test Voltage: 0.5 ±0.1Vrms

介质耐电强度 (DWV) Dielectric Withstanding Voltage

技术规格:
不应有介质被击穿或损伤
No breakdown or damage.

测试方法:
测量电压：Ⅰ类：300%额定电压　Ⅱ类：250%额定电压
时间： 1~5 秒　充/放电电流：不应超过 50mA
(这部分说明不包括中高压 MLCC)
Measuring Voltage:
Class Ⅰ:300% Rated Voltage　Class Ⅱ:250% Rated Voltage
Duration: 1~5s　Charge/ Discharge Current: 50mA max.
(This method excludes high-Voltage MLCC)

可焊性 Solderability

技术规格:
上锡率应大于 95%
外观：无可见损伤.
At least 95% of the terminal electrode is covered by new solder.
Visual Appearance: No visible damage.

测试方法:
将电容在 80~120℃的温度下预热 10~30 秒.
Preheating conditions:80 to 120℃; 10~30s.

无铅焊料：
浸锡温度：245±5℃
浸锡时间：2±0.5s
Lead-free soldering
Solder Temperature: 245±5℃
Duration: 2±0.5s

<table>
<tr><th>项目
Item</th><th>技术规格
Technical Specification</th><th>测试方法
Test Method and Remarks</th></tr>
<tr><td>耐焊接热
Resistance to Soldering Heat</td><td>
<table>
<tr><td>项目
Item</td><td>Ⅰ类
Class I</td><td>Ⅱ类
Class II</td></tr>
<tr><td>ΔC/C</td><td>≤±2.5%或±0.25pF，取较大值
≤±2.5% or ±0.25PF, whichever is larger</td><td>±15%</td></tr>
<tr><td>DF</td><td colspan="2">同初始标准
Same to initial value.</td></tr>
<tr><td>IR</td><td colspan="2">同初始标准
Same to initial value.</td></tr>
<tr><td colspan="3">外观：无可见损伤 上锡率：≥95%
Appearance： No visible damage.at least 95% of the terminal electrode is covered by new solder.</td></tr>
</table>
</td><td>将电容在 100~200℃的温度下预热 60-120 秒.
浸锡温度：265±5℃
浸锡时间：10±1s
然后取出溶剂清洗干净，在 10 倍以上的显微镜底下观察.
试验后放置时间：24±2 小时。
放置条件：室温
Preheating conditions: 100 to 200℃; 60-120 seconds.
Solder Temperature: 265±5℃
Duration: 10±1s
Clean the capacitor with solvent and examine it with a 10X(min.) microscope.
Recovery Time: 24±2h.
Recovery condition: Room temperature</td></tr>
<tr><td>抗弯曲强度
Resistance to Flexure of Substrate (Bending Strength)</td><td>
<table>
<tr><td>ΔC/C:
Ⅰ类：≤±5%或±0.5pF，取两者中最大者
Ⅱ类： ≤±10%
Class Ⅰ: ≤±5% or ±0.5pF,whichever is larger.
Class Ⅱ: ≤±10%</td></tr>
<tr><td>外观：无可见损伤.
Appearance: No visible damage.</td></tr>
</table>
</td><td>试验基板：PCB 弯曲深度：1mm
施压速度：1mm/sec.
应在弯曲状态下进行测量。
Test Board: PCB Warp: 1mm
Speed: 1mm/sec.
The measurement should be made with the board in the bending position.
 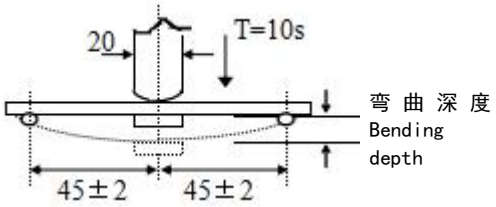
</td></tr>
<tr><td>端头结合强度
Termination Adhesion</td><td>外观无可见损伤
No visible damage.</td><td>如图所示：慢慢施加一个 T 的力到电容侧面瓷体上，并保持 60+1 秒。
As shown in the picture, Slowly apply a T force to the porcelain body on the side of the capacitor and hold for 60+1 seconds.
<table>
<tr><td>规 格
Specification</td><td>施加力 T
Apply force T</td></tr>
<tr><td>≤0402</td><td>2N</td></tr>
<tr><td>≥0603</td><td>5N</td></tr>
</table>
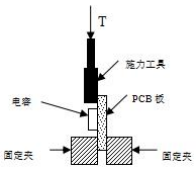
</td></tr>
<tr><td>温度循环
Temperature Cycle</td><td>
<table>
<tr><td>项目
Item</td><td>Ⅰ类
Class Ⅰ</td><td>Ⅱ类
Class Ⅱ</td></tr>
<tr><td>ΔC/C</td><td>≤±1%或±1PF，取较大值
≤±1% or ±1pF，whichever is larger</td><td>-15% ~+15%</td></tr>
<tr><td colspan="3">外观无可见损伤
No visible damage.</td></tr>
</table>
</td><td>初始测量 Initial Measurement
循环次数：5 次，一个循环分以下 4 步：
Cycling Times: 5 times, 1 cycle, 4 steps:
<table>
<tr><td>阶段
Step</td><td>温度（Temperature）（℃）</td><td>时间(Time）</td></tr>
<tr><td>1</td><td>下限温度(Low- category temp.): :-55</td><td>30min</td></tr>
<tr><td>2</td><td>常温(Normal temp.)：+20℃</td><td>2～3min</td></tr>
<tr><td>3</td><td>上限温度(Up- category temp.)
(C0G/X7R/X7T/X7S: +125
X5R:+85 X6S/X6T:+105)</td><td>30min</td></tr>
<tr><td>4</td><td>常温(Normal temp.)：+20℃</td><td>2～3min</td></tr>
</table>
试验后放置（恢复）时间：24±2h
Recovery time after test:24±2h</td></tr>
</table>

<table>
<tr><th>项目
Item</th><th>技术规格
Technical Specification</th><th>测试方法
Test Method and Remarks</th></tr>
<tr><td>耐湿负荷
Humidity load</td><td>
<table>
<tr><td>ΔC/C</td><td colspan="2">Ⅰ类: ±7.5%或±0.75pF,取两者之中较大者.
Ⅱ类: : ≤±12.5%
Class Ⅰ: ±7.5% or ±0.75pF, whichever is larger.
Class Ⅱ: ≤±12.5%</td></tr>
<tr><td>DF</td><td colspan="2">≤2 倍初始标准
Not more than twice of initial value.</td></tr>
<tr><td rowspan="2">IR</td><td>Class Ⅰ</td><td>Ri≥5000MΩ或 Ri•C_R≥50S 取两者之中较小者.
Ri≥5000MΩ or Ri•C_R≥50S whichever is smaller.</td></tr>
<tr><td>Class Ⅱ</td><td>Ri≥1000MΩ或 Ri•C_R≥10S 取两者之中较小者.
Ri≥1000MΩ or Ri•C_R≥10S whichever is smaller.</td></tr>
<tr><td colspan="3">外观：无损伤
Appearance: No visible damage.</td></tr>
</table>
</td><td>温度：40±2℃
湿度：90~95%RH
电压：额定电压
时间：500 小时
放置条件：室温
放置时间：24±2h 小时；
Ⅱ类：0201≥47nF、0402≥33nF、0603≥1μF、0805≥4.7μF、1206≥10μF 产品试验后需在 150℃温度下保持 1h，再放置 24±2h 后测试电性能.
Humidity: 90~95%RH
Voltage: Rated Voltage
Duration: 500h
Recovery Time: 24h±2h
Class 2：0201≥47nF、0402≥33nF、0603≥1μF、0805≥4.7μF、1206≥10μF product need to keep in 150℃、1h after the test，and measurement to be made after being kept at room temperature for 24±2h.</td></tr>
<tr><td>寿命试验
Life Test</td><td>
<table>
<tr><td rowspan="2">ΔC/C</td><td>Ⅰ类
Class Ⅰ</td><td>≤±3%或±0.3pF, 取两者之中较大者
≤ ± 3% or ± 0.3pF, whichever is larger.</td></tr>
<tr><td>Ⅱ类
Class Ⅱ</td><td>-20% ~ +20%</td></tr>
<tr><td>DF</td><td colspan="2">≤2 倍初始标准
Not more than twice of initial value.</td></tr>
<tr><td rowspan="2">IR</td><td>Ⅰ类
Class Ⅰ</td><td>Ri≥4000MΩ或 Ri•C_R≥40S 取两者之中较小者
Ri≥4000MΩ or Ri•C_R≥40S whichever is smaller.</td></tr>
<tr><td>Ⅱ类
Class Ⅱ</td><td>Ri≥2000MΩ或 Ri•C_R≥50S 取两者之中较小者.
Ri≥2000MΩ or Ri•C_R≥50S whichever is smaller.</td></tr>
<tr><td colspan="3">外观：无损伤
Appearance: No visible damage.</td></tr>
</table>
</td><td>低压产品（＜100V） 时间：1000 小时
电压：2 倍额定工作电压，除了表 1 外
温度：125℃（C0G、X7R、X7S） 85℃（X5R）105℃（X6S、X6T）
充电电流：不应超过 50mA.
放置时间：24±2h 小时；
Ⅱ类：0201≥47nF、0402≥33nF、0603≥1μF、0805≥4.7μF、1206≥10μF 产品试验后需在 150℃温度下保持 1h，再放置 24±2h 后测试电性能.
Low-Voltage（＜100V）
Applied Voltage: 2*Ur，except the table 1
Duration: 1000h
Temperature：125℃（C0G、X7R、X7S） 85℃（X5R）105℃（X6S、X6T）
Charge/ Discharge Current: 50mA max.
Recovery Time: 24h±2h
Class 2：0201≥47nF、0402≥33nF、0603≥1μF、0805≥4.7μF、1206≥10μF product need to keep in 150℃、1h after the test，and measurement to be made after being kept at room temperature for 24±2h.
<table>
<tr><th>容量 Capacitance</th><th>试验电压
Voltage</th></tr>
<tr><td>100nF≤0201＜220nF</td><td rowspan="6">1.5Ur</td></tr>
<tr><td>47nF≤0402＜2.2uF</td></tr>
<tr><td>220nF≤0603＜4.7uF</td></tr>
<tr><td>0.47uF≤0805＜10uF</td></tr>
<tr><td>1uF≤1206＜22uF</td></tr>
<tr><td>1uF≤1210＜22uF</td></tr>
<tr><td>0201≥220nF</td><td rowspan="6">1.0Ur</td></tr>
<tr><td>0402≥2.2uF</td></tr>
<tr><td>0603≥4.7uF</td></tr>
<tr><td>0805≥10uF</td></tr>
<tr><td>1206≥22uF</td></tr>
<tr><td>1210≥22uF</td></tr>
</table>
</td></tr>
</table>

◆包装
Package

* 塑料压纹带卷盘结构

Embossed Plastic Taping

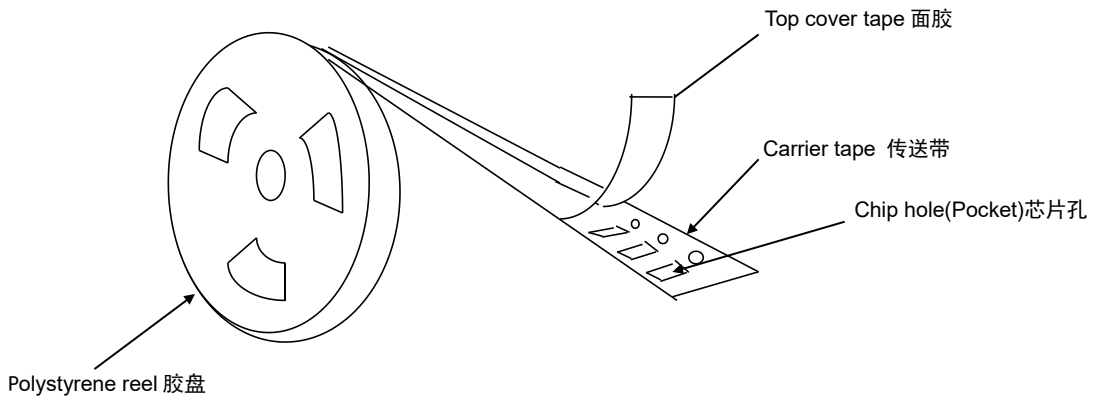

* 仅适用于 1005 规格，压纹带尺寸如下：

The emboss plastic applies only to 1005 type，the dimensions as follows:

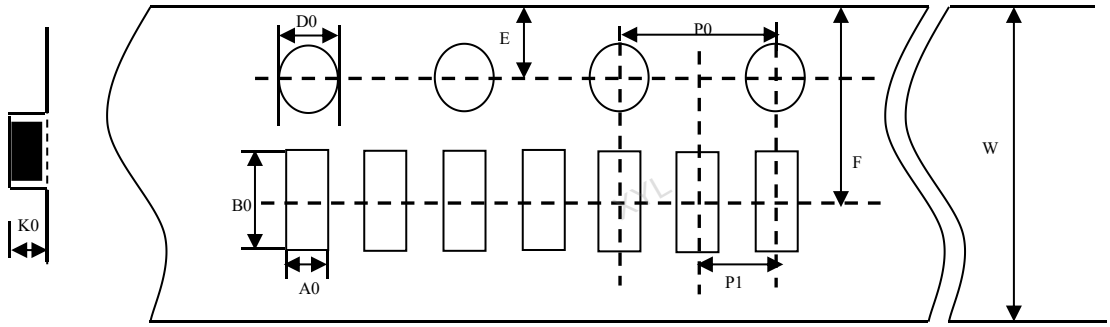

Unit：mm

代号 Code	W	P0	P1	E	F	D0	A0	B0	K0
01005	8±0.1	4±0.1	2±0.05	1.75±0.1	3.5±0.05	1.55±0.05	0.25±0.02	0.45±0.02	0.24±0.02

* 纸带卷盘结构

Paper Taping

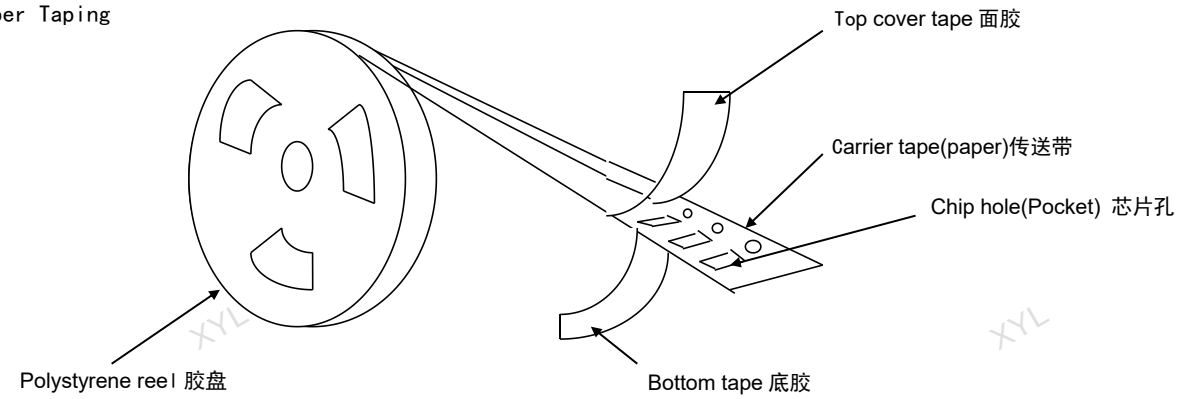

* 1005、0201 纸带编带尺寸大小

Dimensions of paper taping for 1005、0201 type

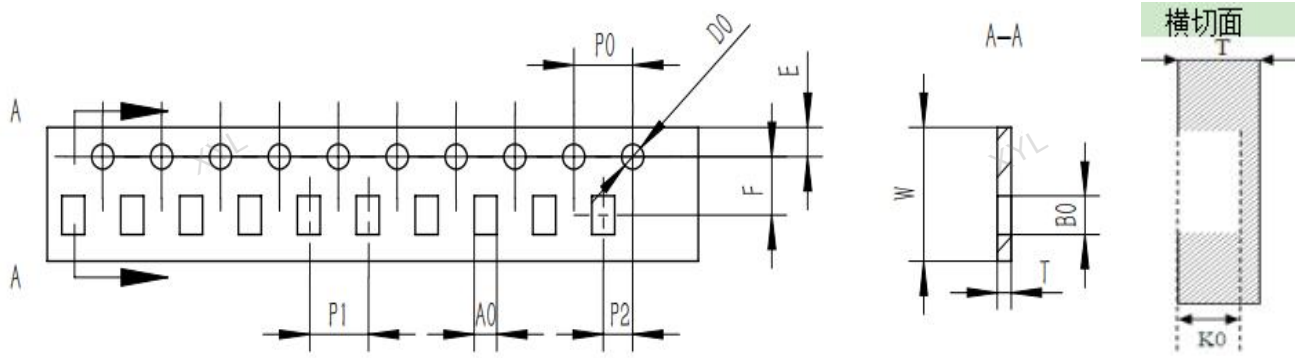

代号 Code	A0	B0	W	F	E	P1	P2	P0	D0	T
1005	0.24±0.02	0.45±0.02	8.0±0.10	3.50±0.05	1.75±0.10	2.0±0.05	2.0±0.05	4.0±0.10	1.50 -0/+0.10	0.30 Below
0201	0.37±0.10	0.67±0.10	8.0±0.10	3.50±0.05	1.75±0.10	2.0±0.05	2.0± 0.05	4.0±0.10	1.50 -0/+0.10	0.80 Below

* 适合‘0402、0603、0805、1206’常规尺寸产品的纸带尺寸

Dimensions of paper taping for 0402，0603，0805，1206 types.

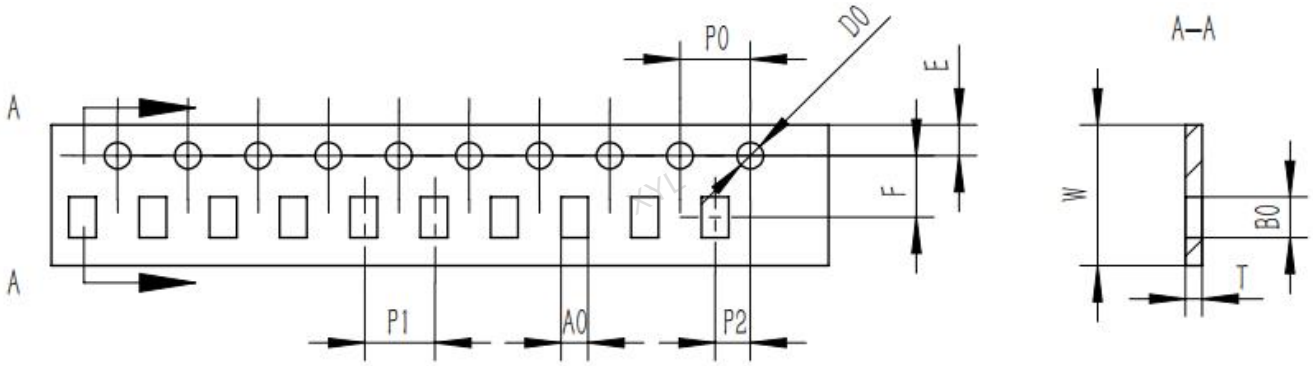

代号 Code 纸带规格	A0	B0	W	F	E	P1	P2	P0	D0	T
0402	0.59±0.03	1.12±0.03	8.0±0.10	3.5±0.05	1.75±0.10	2.0±0.05	2±0.05	4.0±0.10	1.55±0.05	0.60± 0.03
0603	0.95±0.05	1.90±0.05	8.0±0.10	3.5±0.05	1.75±0.10	4.0±0.05	2±0.05	4.0±0.10	1.55±0.05	0.95± 0.03
0805	1.55±0.05	2.30±0.05	8.0±0.10	3.5±0.05	1.75±0.10	4.0±0.05	2±0.05	4.0±0.10	1.55±0.05	0.95± 0.03
1206	1.85±0.05	3.45±0.05	8.0±0.10	3.5±0.05	1.75±0.10	4.0±0.05	2±0.05	4.0±0.10	1.55±0.05	0.95± 0.03

注意：*表示此处对尺寸的要求非常精确。

Note: The place with “*” means where needs exactly dimensions.

* 塑胶卷盘结构

Embossed taping

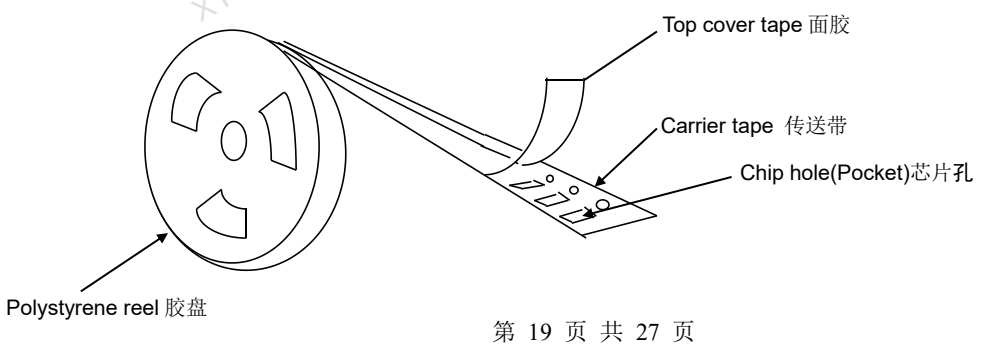

* 塑胶带尺寸结构(适合'0805~1812' 型产品)

Dimensions of embossed taping for 0805~1812 type

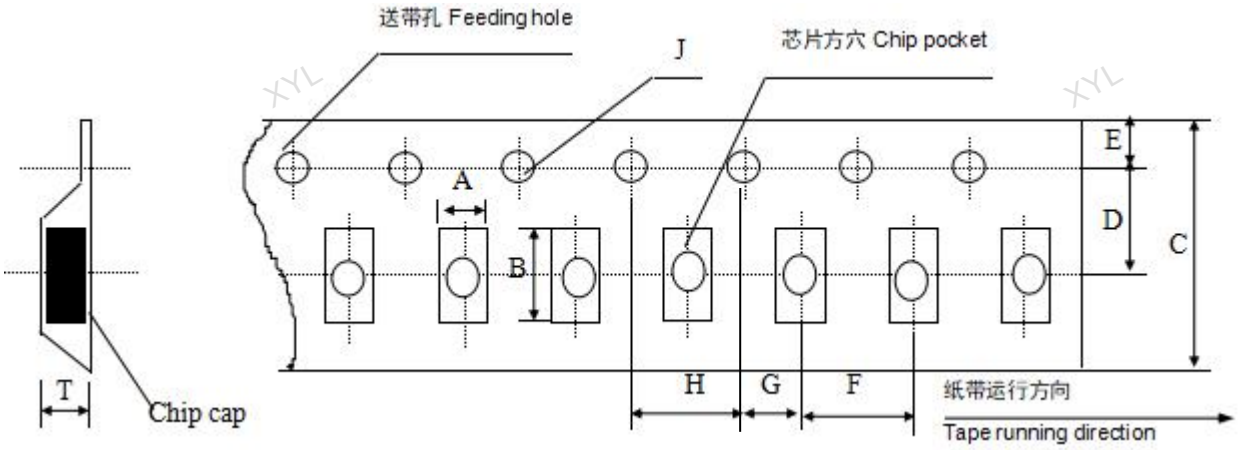

Unit：mm

代号Code / 规格 Tape size	A	B	C	D*	E	F	G*	H	J	T
0805	1.40 + 0.10-0.05	2.25 ± 0.10	8.00 + 0.10-0.03	3.5±0.05	1.75 ± 0.10	4.0±0.1	2±0.05	4.0±0.10	1.55±0.05	1.35 + 0.1-0.03
1206	1.85 ±0.10	3.50 ± 0.10	8.00 + 0.10-0.03	3.5±0.05	1.75 ± 0.10	4.0±0.1	2±0.05	4.0±0.10	1.55±0.05	1.35 + 0.1-0.03
1206	1.88 ±0.10	3.53 ± 0.10	8.00 + 0.10-0.03	3.5±0.05	1.75 ± 0.10	4.0±0.1	2±0.05	4.0±0.10	1.55±0.05	1.80 + 0.1-0.03
1210	2.76 ± 0.10	3.42 ± 0.10	8.00 + 0.10-0.03	3.5±0.05	1.75 ± 0.10	4.0±0.1	2±0.05	4.0±0.10	1.55±0.05	1.55 + 0.1-0.03
1808	2.20 + 0.10-0.03	4.95±0.10	12.00 + 0.10-0.03	5.5±0.05	1.75 ± 0.10	8.0±0.1	2±0.05	4.0±0.1	1.55±0.05	1.80 + 0.1-0.03
1812	3.66 ± 0.10	4.95±0.10	12.00 + 0.10-0.03	5.5±0.05	1.75 ± 0.10	8.0±0.1	2±0.05	4.0±0.1	1.55±0.05	1.85±0.1
2220	5.70 ± 0.10	6.20 ± 0.10	12.00 + 0.10-0.03	5.5±0.05	1.75 ± 0.10	8.0±0.1	2±0.05	4.0±0.1	1.55±0.05	2.0 + 0.15-0.03
2225	6.20 + 0.10-0.03	6.70 + 0.10-0.03	12.00 + 0.10-0.03	5.5±0.05	1.75 ± 0.10	8.0±0.1	2±0.05	4.0±0.1	1.55±0.05	2.4 + 0.10-0.03

* 传送带的前后结构

Structure of leader part and end part of the carrier paper

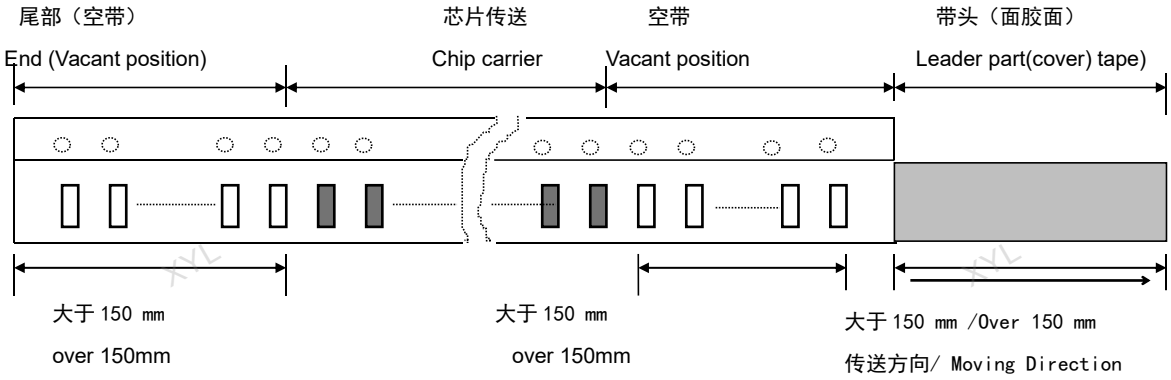

* 卷盘尺寸

Reel dimensions (unit: mm)

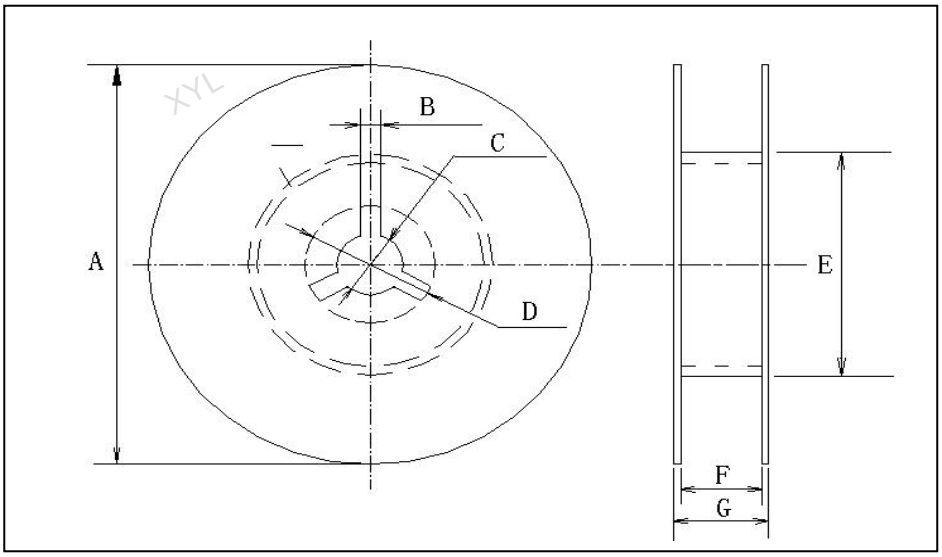

卷盘型号 Reel Code	A	B	C	D	E	F	G
7′REEL	φ178±2.0	3.0	φ13±0.5	φ21±0.8	φ50 或更大 φ50 or more	10.0±1.5	12max
13′REEL	Φ330±2.0	3.0	φ13±0.5	φ21±0.8	92-100	10.0±1.5	12max

* 关于卷带的说明：面胶剥离强度

Taping specification：top tape peeling strength

纸带 Paper Taping

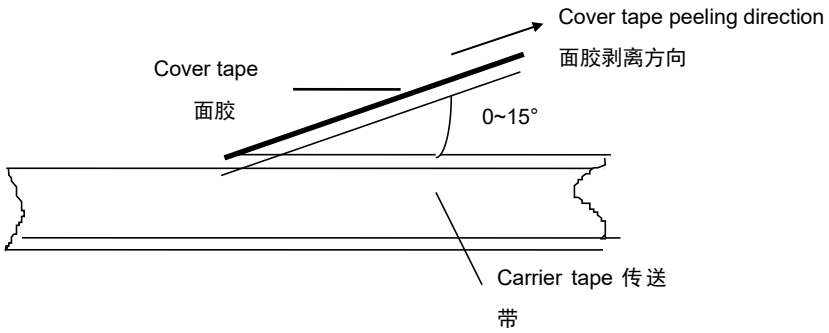

* 塑料胶盘 Embossed Taping

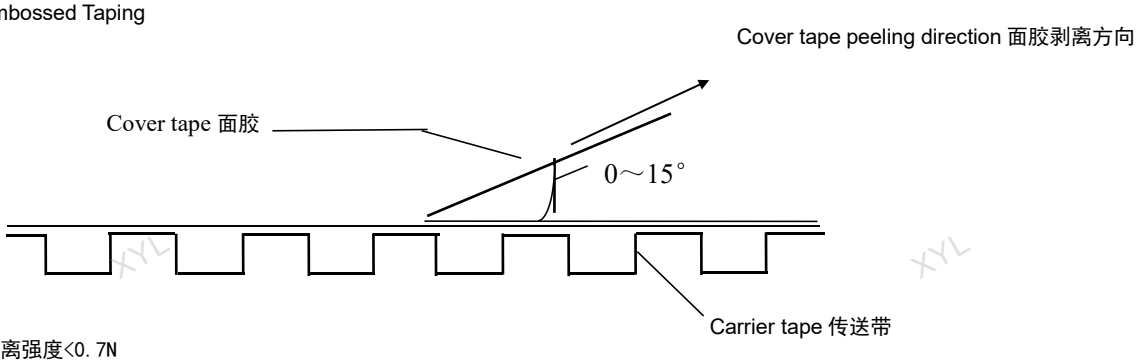

标准：0.1N<剥离强度<0.7N

Standard: 0.1N < peeling strength < 0.7N

在剥离时，纸带不能有纸碎，也不能粘在底、面胶上。

No paper dirty remains on the scotch when peeling, and sticks to top and bottom tape.

* 包装数量

Packing Quantity

尺寸代码 SizeCode	厚度（T） Thickness	7 寸纸带卷盘（PT）	7 寸胶带卷盘（ET）	13 寸纸带卷盘(PT)	13 寸胶带卷盘(ET)
1005	0.20±0.02	20000	——	——	
0201	0.30±0.03	15000	——	70000	
	0.30±0.09	15000	——	70000	
	0.50±0.05	15000	——	70000	
0402	0.50±0.05	10000	——	50000	
	0.50±0.15	10000	——	50000	
	0.50±0.20	10000	——	50000	
0603	0.80±0.10	4000	——	15000	
	0.80±0.20	4000	——	15000	
0805	0.80±0.20	4000	——	15000	——
	1.25±0.25	——	T≤1.35mm 3000 T＞1.35mm 2000	——	10000
1206	0.80±0.20	4000	——	15000	——
	1.25±0.25	——	T≤1.35mm 3000 T＞1.35mm 2000	——	10000
	1.60±0.30	——	2000	——	8000
1210	1.25±0.25	——	2000	——	8000
	1.60±0.30	——	2000	——	8000
	2.50±0.30	——	1000	——	8000
1808	1.60±0.30	——	2000	——	8000
	2.00±0.30	——	2000	——	8000
1812	1.60±0.30	——	T≤1.85mm 1000 T＞1.85mm 500	——	3000
	2.00±0.30	——		——	3000

注意：包装的形式和数量可根据客户的要求来定。

Note：We can choose packing style and quantity can be according to the customer's requirement.

XYL XYL XYL XYL XYL

＊ 外包装

Outer packing

小包装 The first package

Quantity: 10 reels

数量： 10 卷

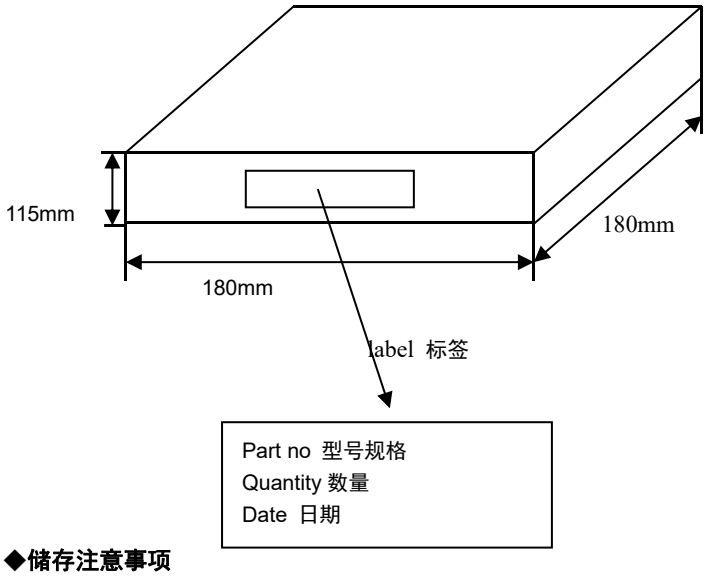

大包装 The second package

Quantity: 6 cases

数量：6 盒

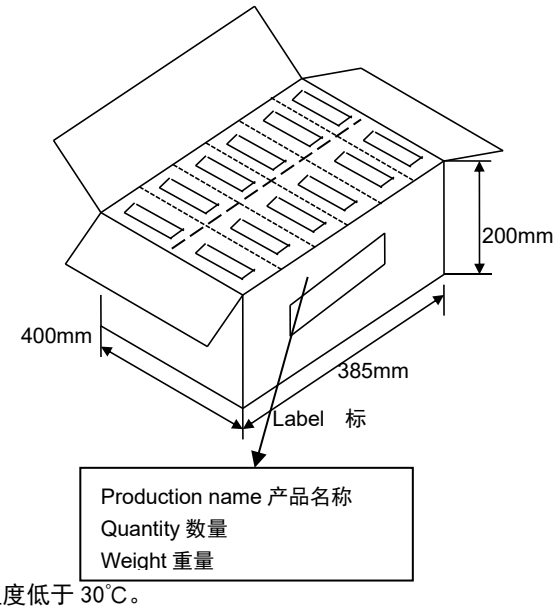

◆储存注意事项

*MLCC 的储存条件：相对湿度为 20~70%，储存温度为 5~40℃，建议温度低于 30℃。

*MLCC 的性能可能会受到储存条件的影响，交货后请立即使用。高温高湿条件、长期储存可能会导致包装材料变质、产品端头电极氧化。如自交付后已超过六个月，使用前检查包装、外观等。如果交付后超过一年，在使用前要检查可焊性。

＊ 不要将电容器存放在含有腐蚀性气体(例如硫化氢、二氧化硫、氯气、氨气等)的环境中。

＊ 不要在阳光直射下或高湿度条件下储存电容器。

◆ Storage Precautions

* Storage Conditions for MLCC: Relative humidity: 20~70%, storage temperature: 5~40℃, recommended temperature is below 30°C.

* The performance of MLCCs may be affected by storage conditions. Please use immediately after delivery. High temperature and high humidity conditions, or long-term storage, may lead to packaging material deterioration and oxidation of the product's end electrodes. If it has been over six months since delivery, check the packaging and appearance before use. If it has been over a year, check the solderability before use.

* Do not store capacitors in environments containing corrosive gases (e.g., hydrogen sulfide, sulfur dioxide, chlorine, ammonia, etc.).

* Do not store capacitors under direct sunlight or in high humidity conditions.

◆使用前注意事项

*安装前的信息

1、不要重复使用从设备上拆下的电容器。

2、确认额定容量、额定电压等电气特性。

3、确认施加电压下的电容特性。

4、确认使用下的机械应力。

5、确认长期存放的电容器的可焊性。

6、在测量电容之前，对长期存放的电容器进行热处理。

◆ Precautions Before Use

Pre-installation Information

1、Do not reuse capacitors removed from equipment.

2、Confirm electrical characteristics such as rated capacitance and rated Voltage.

3、Confirm the capacitor characteristics under applied Voltage.

4、Confirm the mechanical stress under use conditions.

5、Confirm the solderability of capacitors stored for long periods.

6、Perform heat treatment on capacitors that have been stored for a long time before measuring capacitance.

◆应用限制　Application Restrictions

1、我们的产品旨在用于一般消费电子设备(例如家用电器、办公设备、信息和通信设备，AV 设备、OA 设备、包括但不限于手机和 PC 等)，产品的设计基于正常操作和使用条件下的通用应用和标准用途。

2、不推荐用于下列高可靠性应用场景，包括但不限于：航天设备、医疗设备、航空设备、原子能设备、灾难预防设备、犯罪预防设备、电加热设备、燃烧设备、公共信息网络设备、数据处理设备、军事设备、发电控制设备、安全设备、车载设备、交通信号设备、运输设备和海底设备。

3、除非您事先获得风华的书面同意，否则风华不对您或第三方因将我们的产品用于第 2 点设备而产生的任何损害承担任何责任。

1、Our products are intended for use in general consumer electronic devices (such as household appliances, office equipment, information and communication devices, AV equipment, OA equipment, including but not limited to mobile phones and PCs), based on general applications and standard uses under normal operating and usage conditions.

2、Our products are not recommended for the following high-reliability application scenarios, including but not limited to: aerospace equipment, medical devices, aviation equipment, atomic energy equipment, disaster prevention equipment, crime prevention equipment, electric heating equipment, combustion equipment, public information network devices, data processing equipment, military equipment, power generation control equipment, safety equipment, vehicle-mounted devices, traffic signal equipment, transportation equipment, and underwater equipment.

3、Unless you have prior written consent from Fenghua, Fenghua is not liable for any damages caused to you or third parties by using our products in the devices mentioned in point 2.

*** 焊接的条件与相关图表**

Soldering Condition and Profile

为避免因温度的突然变化而引起的芯片开裂或局部爆炸的现象发生,请按有关温度曲线图表来进行.(请参考附页中的图表)

To avoid the crack problem by sudden temperature change, follow the temperature profile in the adjacent graph (refer to the graph in the enclosure page).

*** 手工焊接**

Manual Soldering

手工焊接很容易因为芯片局部受热不均而引起瓷体微裂或局部爆炸的现象,在焊接时,如果操作者不小心,会使烙铁头直接同电容芯片的瓷体部分接触,这样很容易使电容芯片因热冲击而受损或出现其他意外.因此,使用电烙铁手工焊接时应仔细操作,并对电烙铁的尖端的选择和尖端温度控制应多加小心.

Manual soldering can pose a great risk of creating thermal cracks in capacitors. The hot soldering iron tip comes into direct contact with the end terminations, and operator’s careless may cause the tip of the soldering iron to come into direct contact with the ceramic body of the capacitor. Therefore the soldering iron must be handled carefully, and pay much attention to the selection of the soldering iron tip and temperature contact of the tip.

* 推荐焊料用量

Recommended Soldering amounts

回流焊接的最佳焊料用量

The optimal solder fillet amounts for re-flow soldering

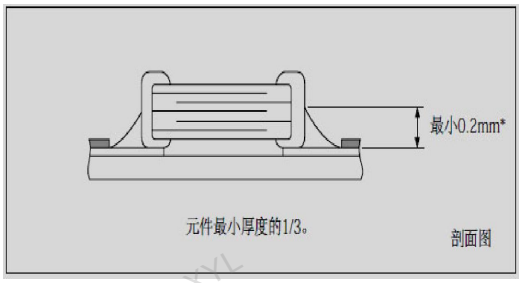

波峰焊接的最佳焊料用量

The optimal solder fillet amounts for wave soldering

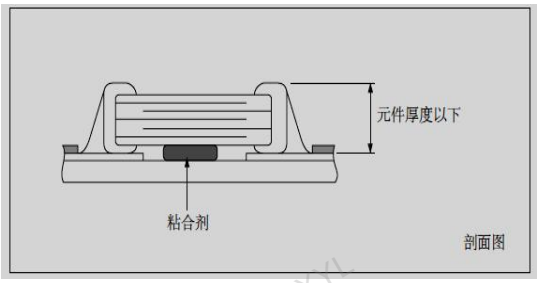

使用烙铁返修时的最佳焊料量

The optimal solder fillet amounts for reworking by using soldering iron

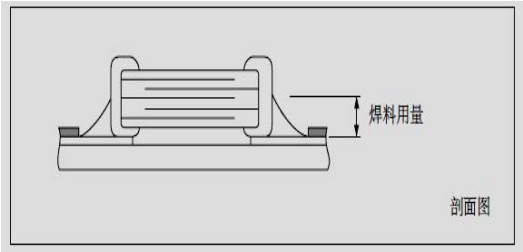

* 推荐焊接方式

Recommended Soldering Method

规格尺寸 Size	温度特性 Temperature Characteristics	容量范围 Capacitance	焊接方式 Soldering Method
1005	C0G	/	R
	X7R/X5R/X7T/X6S	/	R
0201	C0G	/	R
	X7R/X5R/X7T/X6S	/	R

*推荐焊接方式

Recommended Soldering Method

规格尺寸 Size	温度特性 Temperature Characteristics	容量范围 Capacitance	焊接方式 Soldering Method
0402	C0G	/	R
	X7R/X5R/X7T/X6S	/	R
0603	C0G	/	R/W
	X7R/X5R/X7T/X6S	C≥1uf	R
		C＜1uf	R/W
0805	C0G	/	R/W
	X7R/X5R/X7T/X6S	C≥4.7uf	R
		C＜4.7uf	R/W
1206	C0G	/	R/W
	X7R/X5R/X7T/X6S	C≥10uf	R
		C＜10uf	R/W
≥1210	C0G	/	R
	X7R/X5R/X7T/X6S	/	R

焊接方式 Soldering method： R—回流焊 Reflow soldering W—波峰焊 Wave Soldering

*推荐回流焊焊盘尺寸（单位：mm）

Recommended reflow pad size (Unit: mm)

电容产品尺寸 Capacitor product size			焊盘尺寸 Pad size		
规格代码 SizeCode	L	W	A	B	C
1005	0.40±0.02	0.20±0.02	0.16~0.20	0.12~0.18	0.20~0.23
0201	0.60±0.03	0.30±0.03	0.20~0.25	0.20~0.30	0.20~0.35
	0.60±0.09	0.30±0.09	0.23~0.30	0.25~0.35	0.30~0.40
0402	1.00±0.05	0.50±0.05	0.30~0.50	0.35~0.45	0.40~0.60
	1.00±0.15	0.50±0.15	0.40~0.60	0.40~0.50	0.50~0.70
	1.00±0.20	0.50±0.20			
0603	1.60±0.10	0.80±0.10	0.60~0.80	0.60~0.70	0.60~0.80
	1.60±0.20	0.80±0.20	0.70~0.90	0.70~0.80	0.80~1.00
0805	2.00±0.20	1.25±0.25	1.00~1.40	0.60~0.80	1.20~1.40
1206	3.20±0.30	1.60±0.30	1.90~2.10	1.00~1.30	1.60~1.90
1210	3.20±0.30	2.50±0.30	2.00~2.40	1.00~1.30	2.50~2.80
1808	4.50±0.40	2.00±0.20	2.50~3.50	1.00~1.80	2.30~3.50
1812	4.50±0.40	3.20±0.30	2.50~3.50	1.00~1.80	2.30~3.50

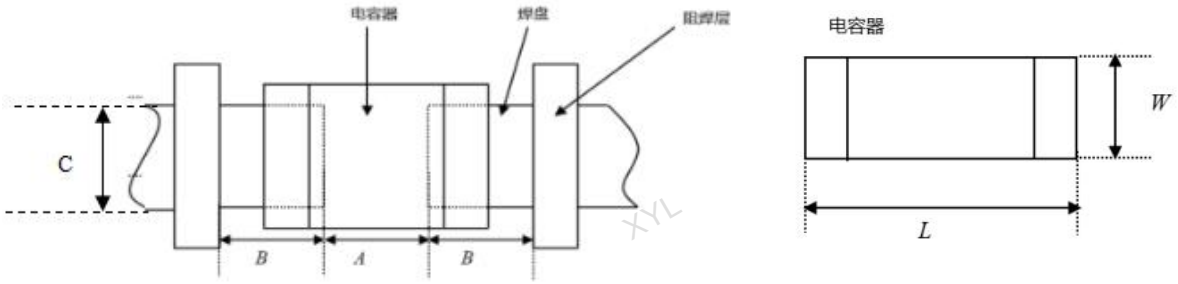

◆ 推荐焊接温度曲线图
The temperature profile for soldering

* 回流焊接（Re-flow soldering)

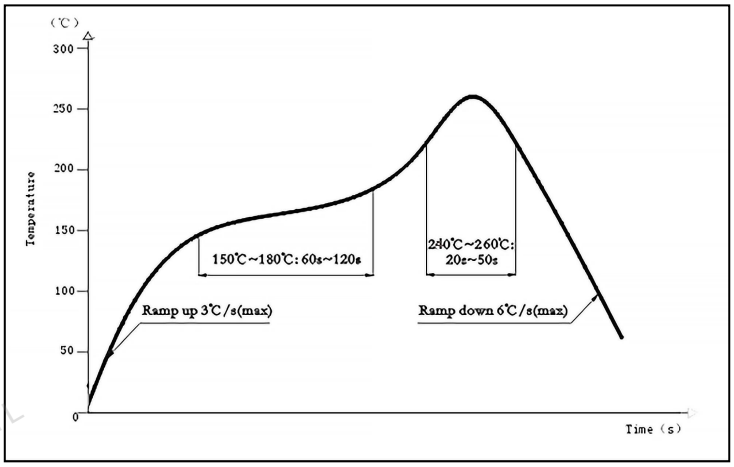

在预热时，请将焊接温度与芯片表面温度之间的温差维持在 T≤150℃。

While in preheating,please keep the temperature difference between soldering temperature and surface temperature of chips as: T≤150℃.

* 波峰焊接（Wave soldering）

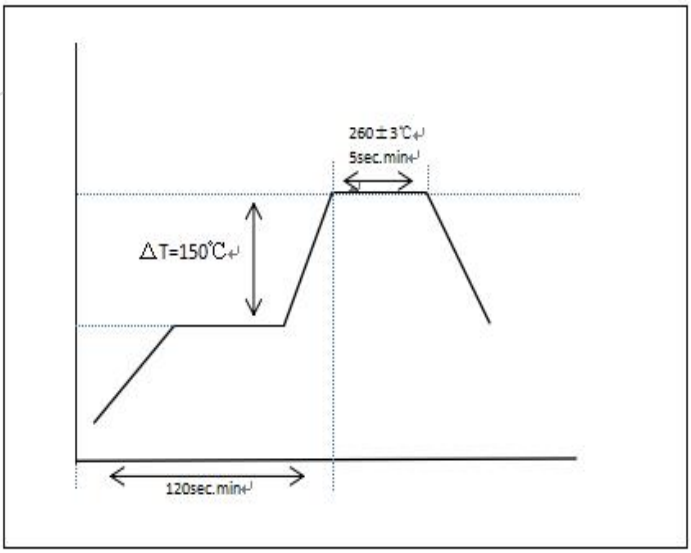

在预热时，请将焊接温度与芯片表面温度之间的温差维持在 T≤150℃。

While in preheating,please keep the temperature difference between soldering temperature and surface temperature of chips as: T≤150℃.

* 手工焊接

Hand soldering

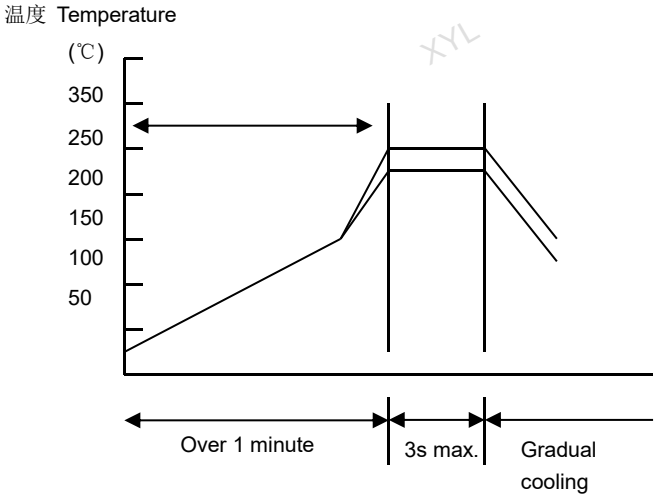

条件 Conditions：

预热 Preheating	烙铁头温度 Temperature of soldering iron head	烙铁功率 Power of soldering iron	烙铁头直径 Diameter of soldering iron head	焊接时间 Soldering time	锡膏量 Solder paste amount	限制条件 Restricted conditions
△≤130℃	最高 350℃ Highest temperature:350℃	最大 20W 20W at the highest	建议 1mm 1mm recommended	最长 3s 3s at the longest	≤1/2 芯片厚度 ≤1/2 chip thickness	请勿使用烙铁头直接接触陶瓷元件 Please avoid the direct contact between soldering iron head and ceramic components

* 备注：产品规格书仅供设计选型参考用，不作为交货依据。

Note:The product specification is for design and selection reference only and shall not serve as a basis for delivery.

■修订履历 Revision History

版本 Version	日期 Date	修订内容 Revision Content	修订人 Reviser
A0001	2024-1-15	新版格式要求重新整理整版内容。Reorganize the entire content according to the new version format requirements.	***
A0002	2025-1-25	新版格式要求重新整理整版内容。Reorganize the entire content according to the new version format requirements.	***
A0003	2025-8-29	修改损耗角正切的试验内容。	***
A0004	2025-10-31	规格书包装纸带图示及去老化条件更新 Specification sheet packaging paper tape illustration and anti-aging condition update	***

注：1.上述所提供之内容为产品规格说明。在产品未变更时，风华保有修改此内容不另行通知之所有权利，任何产品变更将会以 P C N 通知客户。

1.The content provided above is the produce specification, if the product is not changed, FENGHUA reserves all the right to modify this content without prior notice, any product change will be notified to the customer by PCN.

2.产品规格书中，同规格同容量同温度特性可交付的高电压型号规格，可以完全覆盖低压；同规格同容量同电压产品，温度特性 X7R 产品可覆盖 X7S,X7T,X6S,X5R（如 0402B104K250NT 可以覆盖 0402BS104K250NT,0402BT104K250NT, 0402DS104K250NT, 0402X104K250NT）,规格书中就不再列出详细型号规格。

2. In the product specification, deliverable high-Voltage models with the same specifications, capacity, and temperature characteristics can fully cover the low-Voltage models. For products with the same specifications, capacity, and Voltage, X7R temperature characteristic products cancoverX7S,X7T,X6S,andX5R (e.g., 0402B104K250NT can cover 0402BS104K250NT,0402BT104K250NT, 0402DS104K250NT, 0402X104K250NT). Therefore, detailed model specifications will not be listed separately in the specification.